THE SEMICLASSICAL RESOLVENT ON CONFORMALLY COMPACT MANIFOLDS WITH VARIABLE CURVATURE AT INFINITY

ANTÔNIO SÁ BARRETO AND YIRAN WANG

Abstract. We construct a semiclassical parametrix for the resolvent of the Laplacian acing on functions on non-trapping conformally compact manifolds with variable sectional curvature at infinity. We apply this parametrix to analyze the Schwartz kernel of the semiclassical resolvent and Poisson operator and to show that the semiclassical scattering matrix is a semiclassical FIO of appropriate class that quantizes the scattering relation. We also obtain high energy estimates for the resolvent and show existence of resonance free strips of arbitrary height away from the imaginary axis. We then use the results of Datchev and Vasy on gluing semiclassical resolvent estimates to obtain semiclassical resolvent estimates on certain conformally compact manifolds with hyperbolic trapping.

Contents

1. Introduction

Conformally compact manifolds form a special class of complete Riemannian manifolds with negative sectional curvature near infinity. We will use $\mathring{X}$ to denote the interior of a C^∞ manifold X of dimension $n+1$ with boundary ∂X. We shall say that $\rho \in C^\infty(X)$ defines ∂X, or ρ is a boundary defining function,

Key words and phrases. Scattering, asymptotically hyperbolic manifolds, conformally compact manifolds, AMS mathematics subject classification: 35P25 and 58J50.

if $\rho > 0$ in $\mathring{X}$, $\{\rho = 0\} = \partial X$ and $d\rho \neq 0$ at ∂X. We shall say that $(\mathring{X}, g)$ is a conformally compact manifold (CCM) if $\rho^2 g$ is a C^∞ non-degenerate Riemannian metric up to ∂X, which will be called a conformal compactification of g. The hyperbolic space serves as the model for this class: $\mathring{X}$ is the open ball $\mathbb{B} = \{z \in \mathbb{R}^{n+1} : |z| < 1\}$, the defining function of $\partial\mathbb{B}$ is $\rho = 1 - |z|^2$, and the metric $g = \frac{4dz^2}{(1-|z|^2)^2}$, where dz^2 is the Euclidean metric.

For a fixed boundary defining function ρ, the metric g induces a metric H_0 on ∂X given by $H_0 = \rho^2 g|_{\partial X}$. There are infinitely many defining functions of ∂X and any two of these functions ρ and $\tilde{\rho}$ must satisfy $\rho = e^f \tilde{\rho}$, with $f \in C^\infty(X)$. So, if $H_0 = \rho^2 g|_{\partial X}$ and $\tilde{H}_0 = \tilde{\rho}^2 g|_{\partial X}$, then $H_0 = e^{2f}\tilde{H}_0$. Thus there are also infinitely many conformal compactifications of g, and only the conformal class of $\rho^2 g|_{\partial X}$ is uniquely defined by $(\mathring{X}, g)$.

According to [43, 44] a CCM $(\mathring{X}, g)$ is complete and its sectional curvature approaches $|d\rho|_{\partial X}|^2_{H_0}$ as $\rho \downarrow 0$ along any C^∞ curve $\gamma \to \partial X$. We shall denote

$$\kappa = |d\rho|_{\partial X}|_{H_0}, \quad H_0 = \rho^2 g|_{\partial X}, \tag{1.1}$$

Notice that it follows from (1.1) that κ does not depend on the choice of ρ. We shall say that CCM for which κ is constant are asymptotically hyperbolic manifolds (AHM). There is a huge literature on conformally compact manifolds related to conformal field theory, however the CCM studied there are usually Einstein manifolds, and hence they are AHM, see for example the survey by Anderson [4].

The scattering theory of hyperbolic manifolds– where the sectional curvature is constant– has a very long history beginning with the work of Fadeev [17], Fadeev & Pavlov [18] and Lax & Phillips [40]. Scattering on hyperbolic quotients was studied by Agmon [1] and Perry [57, 58], and on general AHM by Mazzeo and Melrose [43] and it has since become a very active field, see for example [7, 24, 27, 32, 35, 36, 41, 61] and references cited there. The literature on scattering on general CCM is much shorter. Mazzeo [44] studied Hodge theory on CCM and Borthwick [6] adapted the construction of Mazzeo and Melrose [43] to analyze the meromorphic continuation of the resolvent for the Laplacian on CCM with variable curvature at infinity.

We know from the work of Mazzeo [44, 46], see also Theorem 1.1 of [6], that if $(\mathring{X}, g)$ is a CCM, the essential spectrum of the Laplacian Δ_g consists of $[\frac{\kappa_0^2 n^2}{4}, \infty)$, where $\kappa_0 = \min_{y\in\partial X} \kappa(y)$, and it is absolutely continuous. The resolvent in this case is defined by

$$R(\lambda) = \left(\Delta_g - \kappa_0^2 \frac{n^2}{4} - \lambda^2\right)^{-1}. \tag{1.2}$$

By the spectral theorem $R(\lambda)$ is an analytic family of operators bounded on $L^2(X)$ for $|\operatorname{Im}\lambda| >> 0$. We shall assume that $R(\lambda)$ is holomorphic on $\operatorname{Im}\lambda >> 0$; it continues meromorphically to $\operatorname{Im}\lambda > 0$ with poles on the imaginary axis given by the square root of the negative eigenvalues of Δ_g, and we will study its meromorphic continuation to $\operatorname{Im}\lambda < 0$. Mazzeo and Melrose [43] showed that if $(\mathring{X}, g)$ is an AHM, $R(\lambda)$ extends meromorphically to $\mathbb{C} \setminus -\frac{i}{2}\mathbb{N}$ and Guillarmou [20] showed that the points $-\frac{i}{2}\mathbb{N}$ can be essential singularities of $R(\lambda)$, unless the metric is even. Borthwick [6] extended the results of [43] to CCM and established the meromorphic continuation of $R(\lambda)$ to a region of the complex plane that excludes some intervals contained on the imaginary axis about the points $-\frac{i}{2}\mathbb{N}$ and also a region near $\lambda = 0$, see Fig.1. However, no estimates were given for $R(\lambda)$ and the behavior of $R(\lambda)$ as $|\lambda| \to \infty$ was not discussed.

We say that a CCM $(\mathring{X}, g)$ is non-trapping if any geodesic $\gamma(t) \to \partial X$ as $\pm t \to \infty$ and we shall assume throughout this paper, with the exception of Section 16, that $(\mathring{X}, g)$ is non-trapping. In Sections 3 to 8 we construct a parametrix for the semiclassical version of $R(\lambda)$ on non-trapping CCM, namely

$$R(h,\sigma) = \left(h^2(\Delta_g - \frac{\kappa_0 n^2}{4}) - \sigma^2\right)^{-1}, \quad \sigma = 1 + h\sigma', \quad \sigma' \in (-c,c) \times i(-C,C); \quad h \in (0,h_0). \tag{1.3}$$

The construction follows in part the strategy of Melrose, Sá Barreto and Vasy [52], Wang [64], but it has several new features including the appearance of Lagrangian manifolds with polyhomogeneous singularity, their parametrization and the study of the Lagrangian distributions associated with such manifolds. In Section 12 we use this parametrix to analyze the semiclassical structure of $R(h,\sigma)$ on non-trapping CCM, and

we show that, modulo $O(h^\infty)$ terms, the Schwartz kernel of $R(h,\sigma)$ is given by the sum of a pseudodifferential part and another term which is given by the product of an oscillating factor that is singular at the boundary and depends on h and a semiclassical Lagrangian distribution in an appropriate class, see Theorem 3.1 and Theorem 12.1 for the precise statements. Melrose, Sá Barreto and Vasy [52] constructed a semiclassical parametrix for the resolvent for small perturbations of the hyperbolic space and used it to prove high energy resolvent estimates and the distribution of resonances. Wang [64] extended the results of [52] to non-trapping AHM. Chen and Hassell [9] also constructed a semiclassical parametrix for the resolvent on non-trapping AHM and used it to study the spectral measure, restriction theorems, spectral multiplier [10] and Strichartz estimates [11].

In Section 13 we use the structure of the resolvent to analyze the semiclassical Poisson operator and in Section 14 we analyze the semiclassical scattering matrix. In particular, we show that on non-trapping CCM, the semiclassical scattering matrix is a semiclassical Fourier integral operator in an appropriate class that quantizes the scattering relation. This is somewhat in contrast with the scattering matrix at a fixed energy, which is well known to be a pseudodifferential operator. We are not aware this has been observed before in the asymptotically hyperbolic setting. Maybe this can be vaguely justified by the fact that the scattering matrix at a fixed energy λ is a multiple of $\Delta_{H_0}^{i\lambda}$, where Δ_{H_0} is the Laplacian associated with the boundary metric H_0 given by (1.1). In the semiclassical version, λ essentially becomes $1/h$ and $\Delta_{H_0}^{1/h}$ is not a semiclassical pseudodifferential operator. The analogue of this result in the asymptotic Euclidean setting was proved by Hassell and Wunsch [30]. We should point out that Guillemin [22] studied the scattering relation in the case of automorphic forms, but using the wave equation. Ji and Zworski [38, 39] also studied the scattering relation for locally symmetric spaces generalizing the result of Guillemin. We illustrate this result in the case of the half-space model of the hyperbolic space $\mathbb{H}^3$. In this case

$$\mathring{X} = \{(x,y) : y \in \mathbb{R}^2,\, x > 0\}, \quad g = \frac{dx^2 + dy^2}{x^2}.$$

This is not an ideal model, since X is not compact, but it has the advantage that the computations are very simple. In this case it is well known, see [31, 25, 43], that Schwartz kernel of the resolvent is given by

$$K_{R(\lambda)}(z,z') = \frac{1}{4\pi}\frac{e^{i\lambda r(z,z')}}{\sinh r(z,z')},$$

where $r(z,z')$ is the distance between z and z' with respect to the metric g. This choice is so that $R(\lambda)$ is bounded on $L^2(X)$ for $\operatorname{Im}\lambda > 0$. It is also well known, see for example [31], that if $z = (x,y)$, $z' = (x',y')$,

$$\cosh r(z,z') = \frac{x^2 + {x'}^2 + |y-y'|^2}{2xx'}.$$

Since $\cosh^2 r - \sinh^2 r = 1$, and $e^r = \cosh r + \sinh r$, it follows that

$$\begin{aligned} K_{R(\lambda)}(z,z') &= \frac{1}{4\pi}(2xx')^{1-i\lambda}\frac{A(\lambda,z,z')}{B(z,z')}, \\ A(\lambda,z,z') &= \Big[x^2 + (x')^2 + |y-y'|^2 + [(x^2 + (x')^2 + |y-y'|^2)^2 - 4(xx')^2]^{\frac{1}{2}}\Big]^{i\lambda} \\ B &= \big[(x^2 + (x')^2 + |y-y'|^2)^2 - 4(xx')^2\big]^{\frac{1}{2}}. \end{aligned} \tag{1.4}$$

Away from the diagonal of $\partial X \times \partial X$, the Schwartz kernel of the scattering matrix is given by

$$K_{S(\lambda)}(y,y') = 2i\lambda(xx')^{-1+i\lambda}K_{R(\lambda)}(z,z')|_{\{x=x'=0\}} = \frac{i\lambda}{\pi}|y-y'|^{2i\lambda-2},$$

see for example [24, 27, 36]. By setting $\lambda = \frac{\sigma}{h}$, it is natural to define the Schwartz kernel of the semiclassical scattering matrix $S(h,\sigma)$ to be

$$K_{S(h,\sigma)}(y,y') = \frac{i\sigma}{\pi h}(xx')^{-1+i\frac{\sigma}{h}}K_{R(h,\sigma)}(z,z')|_{\{x=x'=0\}}.$$

But notice that

$$R(\frac{\sigma}{h}) = \left(\Delta_g - \frac{\kappa_0 n^2}{4} - \frac{\sigma^2}{h^2}\right)^{-1} = h^2\left(h^2(\Delta_g - \frac{\kappa_0 n^2}{4}) - \sigma^2\right)^{-1} = h^2 R(h,\sigma),$$

and so

$$K_{S(h,\sigma)}(y,y') = \frac{i\sigma}{\pi h^3}|y-y'|^{2i\frac{\sigma}{h}-2} = \frac{i\sigma}{\pi h^3}e^{(2i\frac{\sigma}{h}-2)\log|y-y'|}.$$

Then according to Definition 7.5, away from $y = y'$, $K_{S(h,\sigma)}(y,y')$ is a semiclassical Lagrangian distribution of order two (here the dimension of $\partial X \times \partial X$ is $d = 4$) associated with the Lagrangian parametrized by the phase function $\phi(z,z') = 2\sigma\log|y-y'|$,

$$\Lambda_\phi = \{(y,\eta,y',\eta') : \eta = d_y\phi(y,y'),\ \eta' = d_{y'}\phi(y,y')\} = \{\eta' = -\eta,\ \ \eta = 2\sigma\frac{y-y'}{|y-y'|^2}\}.$$

It follows that $|\eta| = 2\sigma|y-y'|^{-1}$, and that

$$\Lambda_\phi = \{(y',\eta',y' - 2\sigma\frac{\eta'}{|\eta'|^2}, -\eta')\},$$

which is the twist ($\eta' \mapsto -\eta'$) of the canonical relation

$$C = \{(y',\eta',y' + 2\sigma\frac{\eta'}{|\eta'|^2}, \eta')\}.$$

On the other hand, one can see from (1.4), that $R(h,\sigma) = x^{-i\frac{\sigma}{h}}U(h,\sigma)$, and so to analyze $U(h,\sigma)$, one should work with the operator

$$\widetilde{P}(h,\sigma,D) = x^{i\frac{\sigma}{h}}P(h,\sigma,D)x^{-i\frac{\sigma}{h}},\ \text{where}$$
$$P(h,\sigma,D) = h^2(\Delta_g - 1) - \sigma^2.$$

The semiclassical principal symbol of the operator $P(h,\sigma,D)$ is equal to

$$p(\sigma,x,y,\xi,\eta) = x^2\xi^2 + x^2|\eta|^2 - \sigma^2,$$

$\sigma \in [a,b] \subset \mathbb{R}_+$, and the symbol of $\widetilde{P}(h,\sigma,D)$ is obtained by changing $\xi \mapsto \xi - \frac{\sigma}{x}$ in the formula for $p(\sigma,x,y,\xi,\eta)$. One gets that the semiclassical principal symbol of $\widetilde{P}(h,\sigma,D)$ is a multiple of x and

$$\wp(x,y,\xi,\eta) = \frac{1}{2x}p(x,y,\xi - \frac{\sigma}{x},\eta) = -\sigma\xi + \frac{1}{2}x(\xi^2+\eta^2).$$

As we will see in Section 6, if Λ^* is the Lagrangian submanifold $\Lambda^* \subset T^*(\mathring{X}\times\mathring{X})$ which consists of integral curves of $H_\wp$ inside $\wp = 0$ starting over the diagonal and going towards the boundary, then it turns out that, away from the diagonal, this manifold extends to a C^∞ Lagrangian manifold across the boundary. Also away from the diagonal, we define the scattering relation Λ^*_∂ as the projection of the closure of Λ^* to $T^*(\partial X\times\partial X)$. The integral curves of $H_\wp$ are C^∞ and since they are contained in $\wp = 0$, they intersect the boundary at $\{x = \xi = 0\}$. So we trace these curves back from the boundary and consider the integral curves of $H_\wp$ starting at $(x,y,\xi,\eta) = (0,y',0,\eta')$. They satisfy

$$\dot{x} = -\sigma + x\xi,\ x(0) = 0,$$
$$\dot{\xi} = -\frac{1}{2}(\xi^2 + |\eta|^2),\ \xi(0) = 0,$$
$$\dot{y}_j = x\eta_j,\ \ y(0) = y,'$$
$$\dot{\eta} = 0,\ \ \eta(0) = \eta'.$$

If $\eta' = 0$, the solution is $x = 0$, $y = y'$, $\xi = 0$, $\eta = \eta' = 0$. If $\eta' \neq 0$, then $\eta = \eta'$, and if one sets $\nu = \xi/|\eta|$,

$$\dot{\nu} = -\frac{1}{2}|\eta|(1+\nu^2),\ \ \nu(0) = 0,$$

and hence

$$\nu(t) = -\tan(\frac{1}{2}|\eta|t), \quad \xi(t) = -|\eta|\tan(\frac{1}{2}|\eta|t).$$

On the other hand $\wp = 0$ on these curves, and hence

$$x = \frac{2\sigma\xi}{\xi^2+\eta^2} = \frac{-2\sigma|\eta|\tan(\frac{1}{2}|\eta|t)}{|\eta|^2(1+\tan^2(\frac{1}{2}|\eta|t))} = -\frac{\sigma}{|\eta|}\sin(|\eta|t).$$

Finally,

$$\dot{y}_j = x\eta_j = -\sigma\eta_j\sin(t|\eta|), \; y(0) = y',$$

and hence

$$y_j(t) - y_j' = \sigma\frac{\eta_j}{|\eta|^2}(\cos(t|\eta|) - 1).$$

Notice that this integral curve will satisfy

$$|y(t) - y' + \frac{\sigma}{|\eta|^2}\eta|^2 + x^2 = \frac{\sigma^2}{|\eta|^2},$$

which of course, as expected, is a great circle orthogonal to $\{x = 0\}$. This integral curve will intersect the boundary again when $x(t) = 0$, and in this case $\sin(t|\eta|) = 0$. We then have $\cos(t|\eta|) = \pm 1$. If $\cos(t|\eta|) = 1$, then $y = y'$. On the other hand, if $\cos(t|\eta|) = -1$,

$$y = y' + 2\sigma\frac{\eta}{|\eta|^2}.$$

So, away from $\{y = y'\}$, the twist of graph of the canonical relation $(y', \eta') \mapsto (y, \eta)$ where $(0, 0, y, \eta) = \exp(tH_\wp)(0, 0, y', \eta')$ defined as above is given by Λ_ϕ. The structure of Λ^* near the diagonal is more complicated and will be discussed in details in Section 6.

In certain applications, for example in the study of long time behavior of the wave or Schrödinger equation or the analysis of the spectral measure, it becomes necessary to understand the behavior of the resolvent at high energies. Cardoso and Vodev [8], and more recently Datchev [13] studied the high energy behavior of the resolvent on the real axis for a class of manifolds that include CCM. Guillarmou [21] used the results of Cardoso and Vodev to show that there is a strip free of resonances for non-trapping AHM that have constant curvature near infinity. In general, under no assumptions of trapping, Guillarmou [21] also showed that there exists an exponentially small neighborhood of the real axis with no resonances. In Section 15 we prove the following

Theorem 1.1. *Let $(\mathring{X}, g)$ be a non-trapping CCM of dimension $n+1$, $n \geq 1$, and let $\rho \in C^\infty(X)$ be a boundary defining function. For any $M > 0$, there exist $K > 0$ such that $\rho^a R(\lambda)\rho^b$ continues holomorphically from $\operatorname{Im}\lambda > 0$ to the region $\operatorname{Im}\lambda > -M$, $|\operatorname{Re}\lambda| > K$ provided $a, b > \frac{-\operatorname{Im}\lambda}{\kappa_0}$ and $a + b \geq 0$. Moreover, there exists $N > 0$, independent of M, K, a, b, and $C > 0$ such that*

$$\|\rho^a R(\lambda)\rho^b f\|_{L^2(X)} \leq C|\lambda|^N \|f\|_{L^2(X)}, \tag{1.5}$$

see Fig.1.

These are the first high energy resolvent estimates on CCM with variable curvature at infinity. In the case of perturbations of the hyperbolic space, the analogue of this result was proved by Melrose, Sá Barreto and Vasy [52]. Wang [64] extended the result for non-trapping AHM. In the case of AHM with even metric in the sense of Guillarmou [20], Vasy developed a method that gives the meromorphic continuation as well as sharp semiclassical resolvent estimates without the need to construct a parametrix, but it is not clear whether his method works in the case of variable curvature. However Vasy's techniques apply to more general Lorentzian manifolds [62, 63] to which the results proved here do not apply.

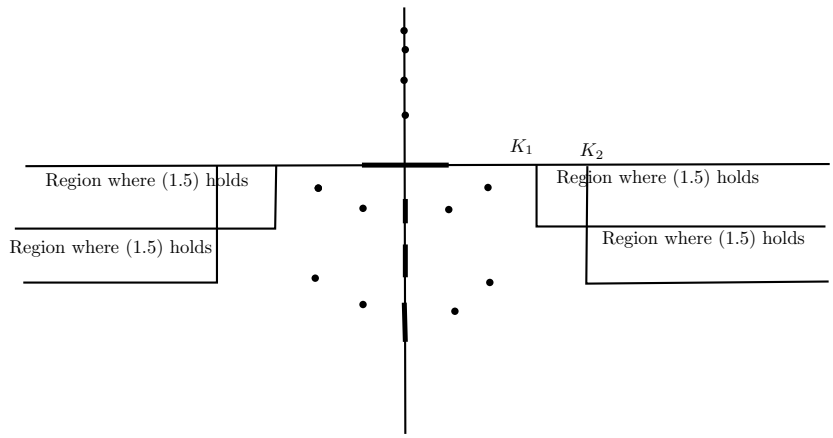

FIGURE 1. On any CCM, $R(\lambda)$ is meromorphic on $\mathbb{C}$ excluding the dark intervals on the imaginary axis and an interval on the real axis about the origin, [6]. If the CCM is non-trapping, then $R(\lambda)$ is holomorphic on strips near the real axis. The dots indicate possible poles, also called resonances, and very little is known about their distribution.

Finally in Section 16 we combine Theorem 1.1 and a result of Datchev and Vasy [12] to extend the results of Section 15 to CCM that may have hyperbolic trapping. We will assume that $x \in C^\infty(X)$ is a boundary defining function and as in [12], let

$$X = X_0 \cup X_1, \quad X_0 = \{x < 2\varepsilon\}, \quad X_1 = \{x > \varepsilon\}$$

and suppose that if $\gamma(t)$ is an integral curve of the Hamiltonian of Δ_g,

$$\text{if } x(t) = x(\gamma(t)) < 2\varepsilon \text{ and } x'(t) = 0 \Rightarrow x''(t) < 0, \tag{1.6}$$

see for example [12, 37]. Let $(\mathring{X}, g_0)$ be a non-trapping CCM and let g be a C^∞ metric on $\mathring{X}$ such that $g = g_0$ in X_0 and suppose that in X_1 the trapped set of g, that is, the set of maximally extended geodesics of g which are precompact, is normally hyperbolic in the sense of Wunsch and Zworski, see section 1.2 of [65], see also section 5.3 of [12].

Theorem 1.2. *Let $(\mathring{X}, g)$ be as above. If ε is such that* (1.6) *holds, then there exist $\delta > 0$ and $K > 0$ such that $\rho^a R(\lambda)\rho^b$ continues holomorphically from $\operatorname{Im}\lambda >> 0$ to the region $\operatorname{Im}\lambda > -\delta$, $|\operatorname{Re}\lambda| > K$ provided $a, b > \frac{-\operatorname{Im}\lambda}{\kappa_0}$ and $a + b \geq 0$. Moreover, there exist $C > 0$ and $N > 0$ such that*

$$\|\rho^a R(\lambda)\rho^b f\|_{L^2(X)} \leq C|\lambda|^N \|f\|_{L^2(X)}. \tag{1.7}$$

The result of Datchev and Vasy is quite general and Theorem 1.2 can be extended to other cases where there are suitable estimates for the cut-off resolvent on restricted to X_1, as in for example the work of Nonnenmacher and Zworski [55, 56].

2. The resolvent at fixed energy

We briefly recall the analysis of the Schwartz kernel of the resolvent done by Mazzeo and Melrose [43], and Borthwick [6]. In the interior $\mathring{X} \times \mathring{X}$ one can use the Hadamard parametrix construction to show that the Schwartz kernel of the operator $R(\lambda)$ defined in (1.2), which we denote by $K_{R(\lambda)}(z, z')$ (and in general $K_\bullet$ will denote the Schwartz kernel of the operator $\bullet$), is a distribution in $C^{-\infty}(\mathring{X} \times \mathring{X})$ conormal to the diagonal

$$\operatorname{Diag} = \{(z, z') \in \mathring{X} \times \mathring{X} : \ z = z'\}.$$

However, this only gives very limited mapping properties of the operator $R(\lambda)$. The main difficulty is to understand the behavior of $K_{R(\lambda)}(z,z')$ near the boundary faces and especially near the intersection $\overline{\mathrm{Diag}} \cap (\partial X \times \partial X)$. The idea is to obtain an expansion of $K_{R(\lambda)}(z,z')$ in terms of powers of the boundary defining function near the boundary which combined with Schur's lemma gives weighted $L^2(X)$ estimates for $R(\lambda)$, see for example [43, 45, 52]. To analyze the behavior of $K_{R(\lambda)}(z,z')$, as $z, z' \to \partial X$ in all possible regimens, Mazzeo and Melrose introduced the 0-stretched product of $X \times X$, and we recall their construction. Let

$$\partial\overline{\mathrm{Diag}} = \{(z,z) \in \partial X \times \partial X\} = \overline{\mathrm{Diag}} \cap (\partial X \times \partial X).$$

As a set, the 0-stretched product space is

$$X \times_0 X = (X \times X) \backslash \partial\overline{\mathrm{Diag}} \sqcup S_{++}(\partial\overline{\mathrm{Diag}}),$$

where $S_{++}(\partial\overline{\mathrm{Diag}})$ denotes the inward pointing spherical bundle of $T^*_{\partial\overline{\mathrm{Diag}}}(X \times X)$. Let

$$\beta_0 : X \times_0 X \to X \times X \tag{2.1}$$

be the blow-down map. Then $X \times_0 X$ is equipped with a topology and smooth structure of a manifold with corners for which β_0 is smooth. The manifold $X \times_0 X$ has three boundary hypersurfaces: the left and right faces $L = \overline{\beta_0^{-1}(\partial X \times \mathring{X})}$, $R = \overline{\beta_0^{-1}(\mathring{X} \times \partial X)}$, and the front face $\mathrm{ff} = \overline{\beta_0^{-1}(\partial\overline{\mathrm{Diag}})}$. The lifted diagonal is denoted by $\mathrm{Diag}_0 = \overline{\beta_0^{-1}(\mathrm{Diag} \backslash \partial\overline{\mathrm{Diag}})}$. It has three codimension two corners given by the intersection of two of these boundary faces, and a codimension three corner given by the intersection of all the three faces. See Figure 2.

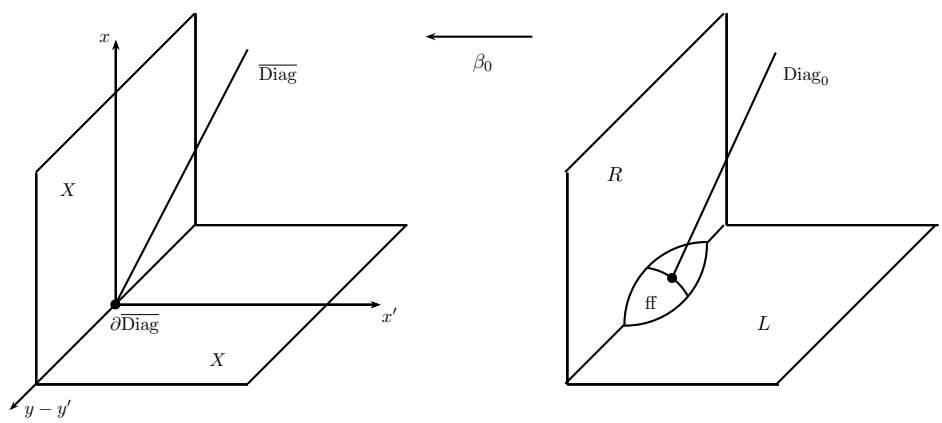

FIGURE 2. The 0-stretched product space $X \times_0 X$.

It is convenient to find a suitable boundary defining function which can be used to express the metric in a simple form. The proof of Lemma 2.1 of [26], which is written in the case of AHM, can be easily adapted with almost no changes for CCM to show that fixed a representative $H_0 \in [\rho^2 g|_{\partial X}]$ of the equivalence class of $\rho^2 g|_{\partial X}$, there exists a unique boundary defining function x in a neighborhood of ∂X such that

$$x^2 g = \frac{dx^2}{\kappa^2(y)} + H(x),\ H(0) = H_0,\ \kappa(y) = |d\rho|_{\partial X}|_{H_0} \text{ on } [0,\varepsilon) \times \partial X, \tag{2.2}$$

where $H(x)$ is a C^∞ family of Riemannian metrics on ∂X parametrized by x. One can extend x to X by setting it equal to a constant on a compact subset of $\mathring{X}$.

In these coordinates,

$$\Delta_g = \kappa(y)^2(-(x\partial_x)^2 + nx\partial_x + x^2 F(x,y)\partial_x) + x^2\Delta_H - x^2 H^{ij}(x,y)(\partial_{y_i}\log\kappa(y))\partial_{y_j}, \tag{2.3}$$

where Δ_H is the Laplacian with respect to the metric $H(x,y)=\sum_{ij}H_{ij}(x,y)dy_idy_j$, and $H^{-1}=(H^{ij})$, and $F(x,y)=\frac{1}{2}\partial_x\log(\det H(x,y))$. Here we used the convention that repeated indices indicate sum over those indices.

We will work on the product $X\times X$, and we shall use (x,y) to denote coordinates on the left factor and (x',y') as coordinates on the right factor of the product.

The Lie algebra of vector fields that vanish on ∂X is denoted by $\mathcal{V}_0(X)$ and as in [43], the space of 0-differential operator of order m, denoted by $\mathrm{Diff}_0^m(X)$, are those of the form

$$P=\sum_{|\alpha|\le m}a_\alpha V_1^{\alpha_1}V_2^{\alpha_2}\dots V_m^{\alpha_m},\ \ V_j\in\mathcal{V}_0(X),\ a_\alpha\in C^\infty(X).$$

In local coordinates in which (2.2) holds, $\partial X=\{x=0\}$, $y\in\partial X$, $\mathcal{V}_0(X)$ is spanned by over $C^\infty(X)$ by $\{x\partial_x,x\partial_y\}$ and in view of (2.3), $\Delta_g\in\mathrm{Diff}_0^2(X)$.

The key point here is that Diag_0 meets the boundary of $X\times_0X$ at the front face ff, and does so transversally. Therefore one can use the product structure (2.2) to extend $X\times_0X$, Diag_0 and $\beta_0^*\Delta_g$ across the front face. We also observe that near Diag_0, the lifted vector fields in $\mathcal{V}_0(X)$ are smooth, tangent to the boundary, but the lift of Δ_g from either the left or right factor is elliptic near Diag_0 across ff. Mazzeo and Melrose [43] defined the class $\Psi_0^m(X)$ of pseudodifferential operators of order m acting on half-densities whose Schwartz kernels lift under β_0 defined in (2.1) to a distribution which is conormal of order m to Diag_0 and vanish to infinite order at all faces, except the front face. So the Schwartz kernel of $A\in\Psi_0^m(X)$ is of the form $K_A(z,z')|dg(z')|^{\frac{1}{2}}$, with K_A as described above, so in particular is C^∞ up to the front face. One can use the Hadamard parametrix construction to find an operator $G_0(\lambda)\in\Psi_0^{-2}(X)$ such that $(\Delta_g-\frac{n^2}{4}-\lambda^2)G_0(\lambda)-\mathrm{Id}=E_0(\lambda)$ where $\beta_0^*K_{E_0}\in C^\infty(X\times_0X)$ and is supported in a neighborhood of Diag_0.

Next one needs to remove the error $E_0(\lambda)$, and to do that Mazzeo and Melrose introduced another class of operators whose kernels are singular at the right and left faces. In the case of AHM, this class will be denoted by $\Psi_0^{m,\alpha,\gamma}(X\times_0X)$, $\alpha,\gamma\in\mathbb{C}$. An operator $P\in\Psi_0^{m,\alpha,\gamma}(X\times_0X)$ if it can be written as a sum $P=P_1+P_2$, where $P_1\in\Psi_0^m(X)$ and the Schwartz kernel $K_{P_2}|dg(z')|^{\frac{1}{2}}$ of the operator P_2 is such that K_{P_2} lifts under β_0 to a conormal distribution which is smooth up to the front face, and which satisfies the following conormal regularity with respect to the other faces

$$\mathcal{V}_b^k\beta_0^*K_{P_2}\in\rho_L^\alpha\rho_R^\gamma L^\infty(X\times_0X),\forall\ \ k\in\mathbb{N},\tag{2.4}$$

where $\mathcal{V}_b$ denotes the space of C^∞ vector fields on $X\times_0X$ which are tangent to the right and left faces, but can be transversal to the front face. Mazzeo and Melrose showed that $R(\lambda)$ depends meromorphically on $\lambda\in\mathbb{C}\setminus-\frac{i}{2}\mathbb{N}$, and

$$R(\lambda)\in\Psi_0^{-2,\frac{n}{2}-i\lambda,\frac{n}{2}-i\lambda}(X).\tag{2.5}$$

Guillarmou [20] later clarified that generically in g, for any k, the point $\lambda=i(k+\frac{1}{2})$ is an essential singularity of $R(\lambda)$, unless the Taylor's expansion of $H(x)$ in (2.2) contains only even powers of x up to order $O(x^{2k+1})$. In the case of CCM, Borthwick [6] used the strategy of Mazzeo and Melrose [43] to analyze the kernel of $R(\lambda)$, and he showed that in this case it is necessary to work with functions that have polyhomogeneous conormal singularities of variable order at the left and right faces. We define

$$\begin{aligned}\varphi\in\mathcal{P}(X\times_0X)\Longleftrightarrow\varphi\in C^\infty&\text{ in the interior of }X\times_0X\text{ and}\\ &\varphi\text{ has a polyhomogeneous expansion at }R\text{ and }L,\end{aligned}\tag{2.6}$$

in the sense that in local coordinates $x=(x_1,x_2,x'')$, valid up to ff, where $L=\{x_1=0\}$, $R=\{x_2=0\}$

$$\varphi\in\mathcal{P}(X\times_0X)\Longleftrightarrow\varphi\sim\sum_{j_1,j_2=0}^{\infty}\sum_{k_1=0}^{j_1}\sum_{k_2=0}^{j_2}x_1^{j_1}x_2^{j_2}(\log x_1)^{k_1}(\log x_2)^{k_2}F_{j_1,j_2,k_1,k_2}(x''),\tag{2.7}$$

where F_{j_1,j_2,k_1,k_2} in C^∞. The asymptotic summation means that if $\varphi_{J_1,J_2}(x)$ is the function given by the sum on the right truncated for $j_1 \leq J_1$ and $j_2 \leq J_2$, then for any $J_1, J_2 \in \mathbb{N}$ and $\delta > 0$ there exists $C(J_1, J_2, \delta)$ such that

$$|\varphi(x_1, x_2, x'') - \varphi_{J_1,J_2}(x_1, x_2, x'')| \leq C(J_1, J_2, \delta) x_1^{J_1-\delta} x_2^{J_2-\delta}.$$

It is not very difficult to show that this definition is independent of the choice of coordinates, but the characterization of this space in terms of the action of vector fields is carried out in [6]. This a very small class of polyhomogeneous distributions, but it is necessary to work within it, as we will need to control k_m in terms of j_m, $m = 1, 2$. For example, we will take Borel sums of the form $\sum_j h^j a_j$, $h \downarrow 0$, where a_j is polyhomogeneous, and we will also need that products of such distributions remain in the same class. Borthwick also needed to introduce the spaces

$$\mathcal{K}^{\alpha,\beta}_{ph}(X \times_0 X) = \{\varphi : \rho_L^{-\alpha} \rho_R^{-\beta} \varphi \in \mathcal{P}(X \times_0 X)\}, \quad \alpha, \beta \in C^\infty(X \times_0 X)\}, \tag{2.8}$$

and showed that $\mathcal{K}^{\alpha,\beta}_{ph}$ is invariantly defined, and it also only depends on the values of $\beta|_{\{\rho_R=0\}}$ and $\alpha|_{\{\rho_L=0\}}$. One can then define the corresponding space of pseudodifferential operators: Given $\alpha, \beta \in C^\infty(X \times_0 X)$ one says that

$$\begin{gathered} P \in \Psi^{m,\alpha,\beta}_{0,ph}(X) \text{ if } P = P_1 + P_2, \quad P_1 \in \Psi^m_0(X), \text{ and the kernel of } P_2 \text{ satisfies} \\ \beta_0^* K_{P_2} = K_2 |dg(z')|^{\frac{1}{2}}, \; K_2 \in \mathcal{K}^{\alpha,\beta}_{ph}(X \times_0 X). \end{gathered} \tag{2.9}$$

In the general case when κ is not constant, let $\kappa_0 = \min_{\partial X} \kappa$, and define

$$\mu(\lambda, y) = \frac{1}{\kappa(y)} \sqrt{\lambda^2 - \frac{n^2}{4}(\kappa(y)^2 - \kappa_0^2)}. \tag{2.10}$$

We then extend $\mu(\lambda, y)$ to a C^∞ function on X. One way of doing this would be to define $\mu(\lambda, x, y) = \mu(\lambda, y)$ in a tubular neighborhood of ∂X, where x is a defining function of ∂X, and extend it as a constant further to the interior. Borthwick [6] proved that

$$R(\lambda) \in \Psi^{-2, \frac{n}{2} - i\mu_L, \frac{n}{2} - i\mu_R}_{0,ph}(X), \tag{2.11}$$

where $\mu_\bullet$ is the lift of $\mu(x, y)$ from the $\bullet$ factor, $\bullet = R, L$, and moreover $R(\lambda)$ continues meromorphically from $\{\operatorname{Im} \lambda >> 0\}$ to

$$\mathbb{C} \setminus \{\lambda \in \mathbb{C} : \mu(\lambda, y) \in -\frac{i}{2}\mathbb{N}_0 \text{ for some } y \in \partial X\},$$

see Fig.1.

3. The semiclassical zero stretched product and operator spaces

In this section we define the semiclassical blow-up, which is the same as in [52], define the operator spaces that will be used in the construction of the parametrix, with the exception of the polyhomogeneous semiclassical Lagrangian distributions with respect to a polyhomogeneous Lagrangian submanifold that will be defined in Section 7, and which is one of the novelties in this paper. We will state the theorem about the structure of the parametrix using notation that will be introduced in Section 7. In Section 9, as an example and in preparation to the proof in the general case, we construct the parametrix in the particular case of geodesically convex CCM.

We are interested in the uniform behavior of $R(\lambda)$, defined in (1.2) as $|\operatorname{Re} \lambda| \uparrow \infty$ and $|\operatorname{Im} \lambda| < M$, and so we turn this into a semiclassical problem by setting $h = 1/\operatorname{Re} \lambda$ and regard h as a small parameter. If we set $\lambda = \frac{\sigma}{h}$, then according to (1.3) we have

$$R(\frac{\sigma}{h}) = \left(\Delta_g - \frac{\kappa_0 n^2}{4} - \left(\frac{\sigma}{h}\right)^2\right)^{-1} = h^2 \left(h^2(\Delta_g - \frac{\kappa_0 n^2}{4}) - \sigma^2\right)^{-1} = h^2 R(h, \sigma),$$

and so we define

$$P(h,\sigma,D) \doteq h^2(\Delta_g - \frac{\kappa_0 n^2}{4}) - \sigma^2 \tag{3.1}$$
$$\text{where } \sigma = 1 + ih\,\mathrm{Im}\,\lambda, \quad \sigma \in \Omega_\hbar = (1-ch, 1+ch) \times i(-Ch, Ch).$$

As in [6, 43], we need to work on the blown up space $X \times_0 X$ to construct the Schwartz kernel of $R(h,\sigma)$, but now we also have the semiclassical parameter $h \in [0,1)$, and so we have to work in $X \times_0 X \times [0,1)$. We shall adapt the spaces defined by Melrose, Sá Barreto and Vasy [52] to include distributions that have polyhomogeneous expansions at the right and left faces. As in [52], we use $\hbar$ to denote the semiclassical nature of a mathematical object, so as not to confuse it with a family of such objects depending on the parameter h.

On $X \times_0 X \times [0,1)$, the submanifolds $\mathrm{Diag}_0 \times [0,1)$ and $X \times_0 X \times \{0\}$ intersect transversally, so as in section 3 of [52], we blow up this intersection. This gives the space $X^2_{0,\hbar}$, and we shall denote the associated blow-down map by

$$\beta_{0,\hbar} : X^2_{0,\hbar} \longrightarrow X \times_0 X \times [0,1).$$

The composition of the blow down maps β_0 and $\beta_{0,\hbar}$ will be denoted by

$$\beta_\hbar = \beta_{0,\hbar} \circ \beta_0 : X^2_{0,\hbar} \longrightarrow X \times X \times [0,1).$$

The resulting manifold $X^2_{0,\hbar}$ is a C^∞ compact manifold with corners and it has five boundary faces, see Fig.3. The left and right faces, denoted by $\mathcal{L}, \mathcal{R}$, are the closure of $\beta^{-1}_{0,\hbar}(L \times [0,1)), \beta^{-1}_{0,\hbar}(R \times [0,1))$ respectively. The front face $\mathcal{F}$ is the closure of $\beta^{-1}_{0,\hbar}(\mathrm{ff} \times [0,1) \backslash (\partial\,\mathrm{Diag}_0 \times \{0\}))$. The semiclassical front face $\mathcal{S}$ is the closure of $\beta^{-1}_{0,\hbar}(\mathrm{Diag}_0 \times \{0\})$. Finally, the semiclassical face $\mathcal{A}$ is the closure of $\beta^{-1}_{0,\hbar}((X \times_0 X \backslash \mathrm{Diag}_0) \times \{0\})$. The lifted diagonal denoted by $\mathrm{Diag}_\hbar$ is the closure of $\beta^{-1}_{0,\hbar}(\mathrm{Diag}_0 \times (0,1))$.

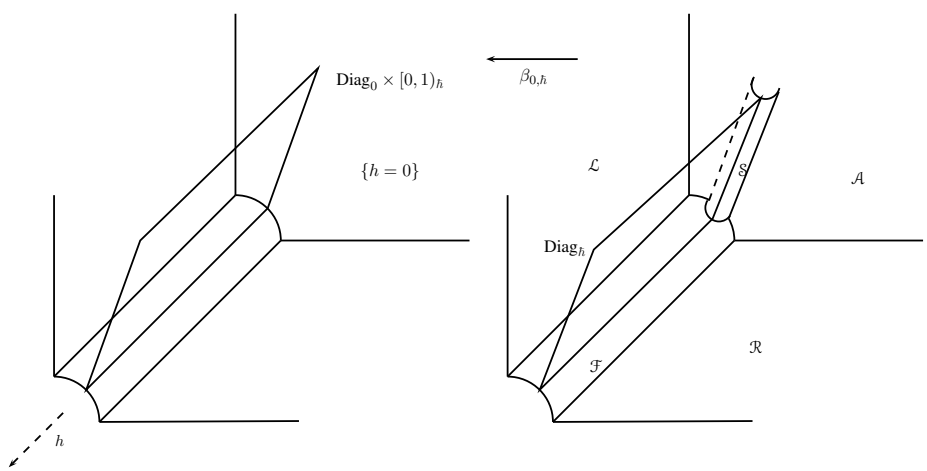

FIGURE 3. The semiclassical blown-up space. The figure on the right is $X^2_{0,\hbar}$ and the figure on the left is $X \times_0 X \times [0,1)$.

We follow the strategy of [52] and we will find an operator $G(h,\sigma)$ such that

$$P(h,\sigma,D)G(h,\sigma) = \mathrm{Id} + E(h,\sigma), \tag{3.2}$$

where $\beta^*_\hbar K_{E(h,\sigma)}$ vanishes to infinite order on the left face $\mathcal{L}$, the zero-front face $\mathcal{F}$, the semiclassical front face $\mathcal{S}$ and the semiclassical face $\mathcal{A}$. Then we use an appropriate version of Schur's Lemma to prove that the error term is bounded as an operator acting between weighted $L^2(X)$ spaces and its norm goes to zero as $h \downarrow 0$.

As in the work of Mazzeo and Melrose [43] and Borthwick [6], we will show that behavior $G(h,\sigma)$ at the right and left faces is determined by the indicial roots. We say that $\alpha \in \mathbb{C}$ is an indicial root of $P(h,\sigma,D)$ if for any $v \in C^\infty(X)$ there exists $V \in C^\infty(X)$ such that

$$P(h,\sigma,D)(x^\alpha v) = x^{\alpha+1}V.$$

In view of (2.3), if $v \in C^\infty(X)$ there exists $V \in C^\infty(X)$ such that

$$P(h,\sigma,D)(x^\alpha)v = (h^2(-\kappa^2(y)(\alpha^2 - n\alpha) - \frac{\kappa_0 n^2}{4}) - \sigma^2)x^\alpha v + x^{\alpha+1}V,$$

and so α is an indicial root if and only if $h^2\kappa^2(y)(\alpha^2 - n\alpha) + \sigma^2 + h^2\frac{\kappa_0 n^2}{4} = 0$, and therefore

$$\alpha(h,\sigma,y) = \frac{n}{2} \pm i\frac{\sigma}{h}\mu, \quad \mu = \frac{1}{\kappa(y)}\left(1 - \frac{n^2h^2(\kappa^2(y) - \kappa_0^2)}{4\sigma^2}\right)^{\frac{1}{2}}. \tag{3.3}$$

This is the semiclassical version of the function $\mu(\lambda, y)$ defined in (2.10). Since we assume the resolvent is holomorphic on $\operatorname{Im}\lambda >> 0$, we will pick the negative sign in (3.3). When κ is constant, $\mu = \frac{1}{\kappa}$, which is what appears in (2.5), but in general $\mu \in C^\infty(\partial X)$ and it appears in (2.11).

The function $\kappa \in C^\infty(\partial X)$ can be extended to a C^∞ function in the whole manifold X by first setting $\kappa(x,y) = \kappa(y)$ in a tubular neighborhood of ∂X, where (x,y) are as in (2.2), and then extending $\kappa(x,y)$ to X. We then define $\kappa_R = \beta_0^*\kappa(z')$ as the lift of $\kappa(z')$ from the right factor and similarly $\kappa_L = \beta_0^*\kappa(z)$ as the lift from the left factor.

We shall define

$$\mu_\bullet(m) = \frac{1}{\kappa_\bullet(m)}\left(1 - \frac{n^2h^2(\kappa_\bullet^2(m) - \kappa_0^2)}{4\sigma^2}\right)^{\frac{1}{2}}, \quad \bullet = R, L, \ m \in X \times_0 X. \tag{3.4}$$

If h_0 is such that

$$\frac{n^2h^2}{4|\sigma^2|}(\kappa_\bullet^2 - \kappa_0^2) < \frac{1}{2}, \ \sigma = 1 + h\sigma', \ h \in [0, h_0], \ \sigma' \in (-c,c) \times i(-C,C), \tag{3.5}$$

then $\mu_\bullet$ is a holomorphic function of $(\kappa_\bullet^2 - \kappa_0^2)\frac{n^2h^2}{4\sigma^2}$, and since $\sigma = 1 + h\sigma'$,

$$\mu_\bullet - \frac{1}{\kappa_\bullet} = h^2\nu_\bullet(h,\sigma',m) \sim h^2\sum_{j=0}^\infty \mu_{j,\bullet}(\sigma',m)h^{2j}, \quad \bullet = R, L, \quad \sigma = 1 + h\sigma'. \tag{3.6}$$

As for the boundary defining functions of R and L, we may choose ρ_R and ρ_L such that $\rho_R = \rho_L = 1$ near Diag_0. With these choices of κ_R, κ_L, ρ_R and ρ_L, we define

$$\tilde{\gamma} = \mu_R \log\rho_R + \mu_L \log\rho_L. \tag{3.7}$$

Borthwick's construction suggests that the Schwartz kernel of a semiclassical parametrix of $R(h,\sigma)$ should roughly be of the form $G(h,\sigma) = (G_1(h,\sigma) + G_2(h,\sigma))|dg(z')|^{\frac{1}{2}}$, where

$$\begin{gathered}\beta_\hbar^* G_1(h,\sigma) \text{ is supported near } \mathcal{S}, \beta_\hbar^* U_2 \text{ vanishes to infinite order at } \mathcal{S} \text{ and} \\ \beta_0^* G_2(h,\sigma) = \rho_R^{\frac{n}{2}}\rho_L^{\frac{n}{2}} e^{-i\frac{\sigma}{h}\tilde{\gamma}} U_2(h,\sigma),\end{gathered} \tag{3.8}$$

where $U_2(h,\sigma)$ is a distribution that has polyhomogeneous expansions at the right and left faces. Notice that $\tilde{\gamma} = 0$ near Diag_0, and $\beta_0^* G_1$ is supported near Diag_0, so $\beta_0^* G_1 = e^{i\frac{\sigma}{h}\tilde{\gamma}}\beta_0^* G_1$. But also notice that in view of (3.6),

$$\begin{gathered}\tilde{\gamma} = \gamma - h^2\beta, \quad \gamma = \frac{1}{\kappa_R}\log\rho_R + \frac{1}{\kappa_L}\log\rho_L, \text{ and} \\ \beta = \nu_L(h,\sigma',m)\log\rho_L + \nu_R(h,\sigma',m)\log\rho_R,\end{gathered} \tag{3.9}$$

and therefore

$$e^{i\frac{\sigma}{h}\tilde{\gamma}} = \rho_R^{ih\sigma\nu_R(h,\sigma',m)}\rho_L^{ih\sigma\nu_L(h,\sigma',m)}e^{i\frac{\sigma}{h}\gamma}. \tag{3.10}$$

So the highly oscillatory part of $e^{i\frac{\sigma}{\hbar}\tilde{\gamma}}$ is given by $e^{i\frac{\sigma}{\hbar}\gamma}$ while the remainder of the expansion of $e^{i\frac{\sigma}{\hbar}\tilde{\gamma}}$ should be viewed as part of a semiclassical symbol. However, while this symbol is polyhomogeneous, the powers of $\rho_\bullet$ that appear in the expansion will depend on $\nu(h,\sigma',m)$ and is not an element of the class of polyhomogeneous distributions defined above.

As in Section 2 and [52], we define the class of semiclassical pseudodifferential operators in two steps, first we define the space $\Psi^m_{0,\hbar}(X)$ which consists of operators whose kernel $K_P(z,z',h)\,|dg(z')|^{\frac{1}{2}}$ is such that

$$\beta^*_\hbar K_P = \rho_{\mathcal{S}}^{-\frac{n}{2}-1}\widetilde{K},$$

where $\widetilde{K}$ is supported near $\mathrm{Diag}_\hbar$ and

$$\mathcal{V}^k_{\mathrm{Diag}_\hbar}\widetilde{K} \in {}^\infty H^{-m-\frac{n+1}{2}}_{loc}(X^2_{0,\hbar}),\quad k\in\mathbb{N},$$
$$\mathcal{V}_{\mathrm{Diag}_\hbar} \text{ consists of } C^\infty \text{ vector fields tangent to } \mathrm{Diag}_\hbar,$$

where the space ${}^\infty H^s_{loc}$ is the Besov space defined in the appendix B of Volume 3 of [34], and since $X^2_{0,\hbar}$ has dimension $2n+3$, and $\mathrm{Diag}_\hbar$ has dimension $n+2$, this choice makes $\widetilde{K}$ a conormal distribution of order $m-\frac{1}{4}$ to $\mathrm{Diag}_\hbar$, see Theorem 18.2.8 of [34].

The analogue of the space (2.4) is given by

$$\mathcal{K}^{a,b,c}(X_{0,\hbar}) = \{K\in L^\infty(X_{0,\hbar}) : \mathcal{V}^m_b K \in \rho^a_{\mathcal{L}}\rho^b_{\mathcal{A}}\rho^c_{\mathcal{R}}\rho_{\mathcal{S}}^{-\frac{n}{2}-1}L^\infty(X_{0,\hbar}),\quad m\in\mathbb{N}\}, \tag{3.11}$$

where $\mathcal{V}_b$ denotes the Lie algebra of vector fields which are tangent to $\mathcal{L}$, $\mathcal{A}$ and $\mathcal{R}$. Again, as in [43], we define the space $\Psi^{m,a,b,c}_{0,\hbar}(X)$ as the operators P which can be expressed in the form $P=P_1+P_2$, with $P_1\in\Psi^m_{0,\hbar}(X)$ and the kernel $K_{P_2}\,|dg(z')|^{\frac{1}{2}}$ of P_2 is such $\beta^*_\hbar K_{P_2}\in\mathcal{K}^{a,b,c}(X_{0,\hbar})$.

Once we construct the parametrix near the semiclassical front face, we obtain errors that vanish to infinite order at $\mathcal{S}$ and this will allow us to work in the space $X\times_0 X\times[0,1)$. As in the case of fixed energy λ, if κ is not constant, one expects polyhomogeneous expansions at the right and left faces instead of (3.11), so we define $\mathcal{P}(X\times_0 X\times[0,1))$ as (2.6) and (2.7), in other words

$$\begin{gathered}\varphi\in\mathcal{P}(X\times_0 X\times[0,1)) \Longleftrightarrow \varphi\in C^\infty \text{ in the interior of } X\times_0 X\times[0,1) \text{ and up to } \mathcal{F} \text{ and}\\ \varphi \text{ has a polyhomogeneous expansion at } L\times[0,1),\ R\times[0,1),\end{gathered} \tag{3.12}$$

where the definition of a polyhomogeneous expansion is the one given in (2.7). For $\mu,\zeta\in C^\infty(X\times_0 X)$, we define the space

$$\mathcal{K}^{\mu,\zeta}_{ph}(X\times_0 X\times[0,1)) = \{\varphi\in C^{-\infty}(X\times_0 X\times[0,h)) : \rho_{\mathcal{L}}^{-\mu}\rho_{\mathcal{R}}^{-\zeta}\varphi\in\mathcal{P}(X\times_0 X\times[0,h))\}, \tag{3.13}$$

where by abuse of notation, we are denoting the left face of $X\times_0 X\times[0,1)$ by $\mathcal{L}=L\times[0,1)$, and the right face of $X\times_0 X\times[0,1)$ by $\mathcal{R}=R\times[0,1)$. We remark that it follows from Lemma 2.3 of [6] that these spaces do not depend on the choice of the defining functions $\rho_{\mathcal{L}}$ or $\rho_{\mathcal{R}}$ and it only depends on $\mu|_{\{\rho_{\mathcal{L}}=0\}}$ and $\zeta|_{\{\rho_{\mathcal{R}}=0\}}$.

Since the sectional curvature of $(\mathring{X},g)$ is negative in a collar neighborhood of ∂X, it follows that a CCM $(\mathring{X},g)$ has a uniform radius of injectivity, in other words there exists $\delta>0$ such that for every $z\in\mathring{X}$, geodesic normal coordinates are valid in a ball $B(z,\delta)=\{z'\in\mathring{X} : r(z,z')<\delta\}$, where r is the length of the geodesic joining z and z'. This is equivalent to saying that $r(z,z')$ is well defined in a neighborhood of Diag, and in fact this implies that $\beta^*_0 r$ is well defined in a neighborhood of Diag_0 and up to a neighborhood of the front face.

Next we state the theorem which gives the structure of the parametrix for non-trapping CCM. We use the spaces of Lagrangian distributions $I^k_{ph}(X\times_0 X,\Lambda^*,\Omega^{\frac{1}{2}})$ in the statement of the theorem, but we will not define it until Section 7. For now we just say that this is the space semiclassical Lagrangian distributions associated with a Lagrangian submanifold and symbols which have polyhomogeneous singularities at the right and left faces of $X\times_0 X$.

Theorem 3.1. *For $h \in (0, h_0)$ with h_0 as in (3.5) and $\sigma \in \Omega_\hbar = (1-ch, 1+ch) \times i(-Ch, Ch)$, there exists $G(h,\sigma) = G_0(h,\sigma) + G_1(h,\sigma) + G_2(h,\sigma) + G_3(h,\sigma) + G_4(h,\sigma)$ such that*

$$
\begin{gathered}
G_0 \in \Psi^{-2}_{0,\hbar}(X), \\
G_1(h,\sigma) = e^{i\frac{\sigma}{h}r} U_1(h,\sigma), \quad U_1(h,\sigma) \in \Psi^{-\infty,\infty,-\frac{n}{2}-1,\infty}_{0,\hbar}(X), \\
\beta^*_\hbar K_{U_1(h,\sigma)} \text{ supported near } \mathcal{S} \text{ and away from } \mathrm{Diag}_\hbar, \\
\beta^*_0 K_{G_2(h,\sigma)} = e^{-i\frac{\sigma}{h}\tilde{\gamma}} U_2(h,\sigma), \quad U_2(h,\sigma) \in \rho_R^{\frac{n}{2}} \rho_L^{\frac{n}{2}} I^{\frac{1}{2}}_{ph}(X \times_0 X, \Lambda^*, \Omega^{\frac{1}{2}}), \\
\beta^*_0 K_{G_3(h,\sigma)} = e^{-i\frac{\sigma}{h}\tilde{\gamma}} U_3(h,\sigma), \; U_3 \in h^\infty \mathcal{K}^{\frac{n}{2},\frac{n}{2}}_{ph}(X \times_0 X \times [0,h_0)), \\
\beta^*_0 K_{G_4(h,\sigma)} = e^{-i\frac{\sigma}{h}\tilde{\gamma}} U_4(h,\sigma), \; U_4 \in h^\infty \rho^\infty_{\mathrm{ff}} \mathcal{K}^{\frac{n}{2},\frac{n}{2}}_{ph}(X \times_0 X \times [0,h_0)),
\end{gathered}
\tag{3.14}
$$

and such that, for $\tilde{\gamma}$ defined in (3.7),

$$
\begin{gathered}
P(h,\sigma,D)G(h,\sigma) - \mathrm{Id} = E(h,\sigma), \\
\beta^*_0 K_{E(h,\sigma)} \in h^\infty \rho^\infty_{\mathrm{ff}} e^{-i\frac{\sigma}{h}\tilde{\gamma}} \mathcal{K}^{\infty,\frac{n}{2}}_{ph}(X \times_0 X \times [0,h_0)).
\end{gathered}
\tag{3.15}
$$

4. An outline of the proof

The proof will be divided into five steps, each one dedicated to the construction of the operators $G_j(h,\sigma)$, $0 \le j \le 4$. The construction of the first two terms $G_0(h,\sigma)$ and $G_1(h,\sigma)$ will be carried out in Section 5. The operator $G_0(h,\sigma)$ is a pseudodifferential operator and $P(h,\sigma,D)G_0(h,\sigma) - \mathrm{Id} = E_0(h,\sigma)$ is such that $\beta^*_\hbar E_0(h,\sigma)$ is C^∞ near $\mathrm{Diag}_\hbar$, i.e. $G_0(h,\sigma)$ removes the singularity at the diagonal. We take care to have $\beta^*_\hbar K_{G_0(h,\sigma)}$ and $\beta^*_\hbar K_{E_0(h,\sigma)}$ supported near $\mathrm{Diag}_\hbar$, see Fig.4. The operator $G_1(h,\sigma)$ is such that if $P(h,\sigma,D)G_1(h,\sigma) - E_0(h,\sigma) = E_1(h,\sigma)$, $\beta^*_\hbar K_{E_1(h,\sigma)}$ vanishes to C^∞ order at the semiclassical front face, but it now produces an error supported near the semiclassical face, see Fig.5.

To remove the error at the semiclassical face we construct the operator $G_2(h,\sigma)$ which belongs to the class of semiclassical Lagrangian distributions associated with a Lagrangian manifold with polyhomogeneous singularity, which is one of the main novelties of the paper. We analyze the underlying Lagrangian submanifolds in Section 6, and in Section 7 we discuss the corresponding semiclassical Lagrangian distributions. In section 8 we construct the operator $G_2(h,\sigma)$ which removes the error at the semiclassical face, but this will introduce errors at the front and left faces. The operator $G_3(h,\sigma)$ removes the error on the front face, and is constructed by using the normal operator at the front face, as in [43]. Finally, the operator $G_4(h,\sigma)$ removes the error at the left face, and its construction is based on the arguments of [43] which use the indicial operator.

In section 12, we also use an argument of [43] to obtain the resolvent from the parametrix. We use the structure of the resolvent to analyze the semiclassical Poisson operator and in section 13 and the semiclassical scattering matrix in section 14.

5. The first two steps of the proof: The construction near $\mathrm{Diag}_\hbar$

For now we will carry out the first two steps in the proof of Theorem 3.1, and we will construct $G_0(h,\sigma)$ and $G_1(h,\sigma)$. This construction takes place near $\mathrm{Diag}_\hbar$ uniformly up to $\mathcal{S}$ and $\mathcal{F}$, but away from the right and left faces, so the fact that the asymptotic sectional curvature is not constant does not play a significant role in these steps. We first remove the singularity at the diagonal, and then remove the error at the semiclassical front face.

We first prove the following

Lemma 5.1. *There exists $G_0(h,\sigma) \in \Psi^{-2}_{0,\hbar}(X)$ holomorphic in $\sigma \in \Omega_\hbar$, $h \in (0,h_0)$ such that*

$$
P(h,\sigma,D)G_0(h,\sigma) - \mathrm{Id} = E_0(h,\sigma) \in \Psi^{-\infty}_{0,\hbar}(X) \tag{5.1}
$$

with $\beta^*_\hbar K_{G_0(h,\sigma)}$ and $\beta^*_\hbar K_{E_0(h,\sigma)}$ supported in a neighborhood of $\mathrm{Diag}_\hbar$ in $X^2_{0,\hbar}$ that only intersects the boundary of $X^2_{0,\hbar}$ at the semiclassical front face $\mathcal{S}$ and the front face $\mathcal{F}$.

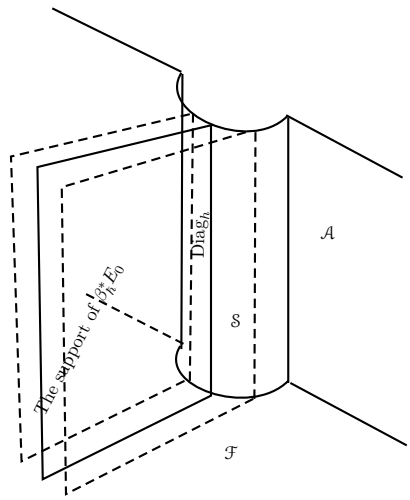

FIGURE 4. The support of $\beta_\hbar^* E_0$

Proof. This is easily done in the interior, since $\beta_\hbar^* P(h,\sigma,D)$ is elliptic there. In this case, the construction of $G_0(h,\sigma)$ in the interior follows for example from the standard Hadamard parametrix construction. We will show that this also works uniformly up to $\mathcal{F}$ and $\mathcal{S}$. As mentioned before, this is possible because the lifted diagonal intersects the boundary of $X^2_{0,\hbar}$ transversally only at $\mathcal{F}$ and $\mathcal{S}$, see Fig.4. The proof is as in [43] and was used in the semiclassical setting in [52]. We first compute the lift of the operator $\beta_\hbar^* P(h,\sigma,D)$ and show it is uniformly transversally elliptic at $\mathrm{Diag}_\hbar$ up to the boundary of $X^2_{0,\hbar}$.

Since we are interested in a neighborhood of the diagonal we work on a partition of unity given by $U_j \times U_j$, where U_j is a neighborhood intersecting ∂X, and (x,y) are local coordinates in U_j for which (2.2) works. Again we will use (x,y) to denote coordinates on the left factor and (x',y') to denote coordinates on the right factor. So Δ_g, on the left factor, is given by (2.3) and the operator $P(h,\sigma,D)$ given by (3.1). Then $\mathrm{Diag}\cap(\partial X\times\partial X)=\{x=x'=0, y=y'\}$. One can use polar coordinates $\rho_{\mathrm{ff}}=(x^2+y^2+|y-y'|^2)^{\frac{1}{2}}$, $\rho_R = x'/\rho_{\mathrm{ff}}$, $\rho_L = x/\rho_{\mathrm{ff}}$ and $Y=(y-y')/\rho_{\mathrm{ff}}$, but since Diag_0 does not intersect either the right or left faces of $X\times_0 X$, $\rho_R > C > 0$ near Diag_0, it is easier to use projective coordinates

$$X = x/x', \quad Y=(y-y')/x', \quad x', \quad y'. \tag{5.2}$$

Here X is a boundary defining function for L and x' is a boundary defining function for ff. We deduce from (2.3) and (3.1) that $\beta_0^* P(h,\sigma)$ is given by

$$\begin{aligned} &\beta_0^*(P(h,\sigma)) = \\ &h^2\kappa^2(y'+x'Y)[-(X\partial_X)^2 + n(X\partial_X) - F(x'X, y'+x'Y)X^2x'\partial_X] + h^2X^2\Delta_{H(x'X,y'+x'Y)}(D_Y) \\ &-h^2X^2\sum_i \partial_{Y_i}(\log\kappa(y'+x'Y))H^{ij}\partial_{Y_j} - \frac{\kappa_0 n^2}{4}h^2 - \sigma^2. \end{aligned} \tag{5.3}$$

Here $\Delta_H(D_Y)$ means the derivatives in Δ_H are in Y variable. Notice that,

$$\begin{aligned} &\beta_0^*(P(h,\sigma,D)) = h^2(\Delta_{g^0} - \frac{\kappa_0 n^2}{4}) - \sigma^2, \text{ where} \\ &g^0(x',y',X,Y,dX,dY) = \frac{dX^2}{\kappa^2(y'+x'Y)X^2} + \frac{1}{X^2}\sum_{i,j=1}^n H_{ij}(x'X, y'+x'Y)dY_idY_j, \end{aligned} \tag{5.4}$$

and we interpret g^0 is a C^∞ family of metrics parametrized by (x',y'), across the front face where $x'=0$. We are working in the region near $\mathrm{Diag}_0=\{X=1,Y=0\}$, so the metric g^0 is C^∞, and we can introduce geodesic normal coordinates around $\{X=1,Y=0\}$, which is C^∞ manifold parametrized by (x',y'). Fixed

$z' \in \mathring{X}$, let $r(z')$ be the geodesic distance from z'. As we discussed above, this is well defined if r small, and one can interpret $\beta_0^* r$ as the distance along the geodesics of the metic (5.4) for fixed (x', y'). Since we are working on a compact region, geodesic normal coordinates (r, θ) hold in a neighborhood of Diag_0, across the front face for the metric g^0, and hence

$$g^0 = dr^2 + r^2 \mathcal{H}(r, \theta, d\theta),$$

where $\mathcal{H}$ is a smooth 2-tensor, and by abuse of notation we are using $r = \beta_0^* r$. Therefore, in view of (3.1) and (5.4), the operator $\beta_0^* P(h, \sigma, D)$ is given by

$$\beta_0^* P(h, \sigma, D) = h^2(-\partial_r^2 - A(r, \theta)\partial_r + \frac{1}{r^2} Q(r, \theta, D_\theta) - \frac{\kappa_0 n^2}{4}) - \sigma^2, \tag{5.5}$$

which is of course elliptic up to the front face. Next we blow-up the intersection

$$\mathrm{Diag}_0 \cap \{h = 0\} = \{r = 0, h = 0\}.$$

We will work with projective coordinates:

$$\begin{aligned} &h,\ \rho = r/h,\ x', y',\ \text{valid in the region } r/h \text{ bounded},\\ &r,\ H = h/r,\ x', y',\ \text{valid in the region } h/r \text{ bounded}. \end{aligned} \tag{5.6}$$

At first we are interested in the region where $\mathrm{Diag}_\hbar$ meets $\mathcal{F}$ and $\mathcal{S}$, where we may use the first set of projective coordinates in (5.6), and one has

$$\beta_\hbar^* P(h, \sigma, D) = -\partial_\rho^2 - hA(h\rho, \theta)\partial_\rho + \frac{1}{\rho^2} Q(h\rho, \theta, D_\theta) - h^2 \frac{\kappa_0 n^2}{4} - \sigma^2, \tag{5.7}$$

Now it is evident that $\beta_\hbar^* P(h, \sigma, D)$ is an elliptic operator uniformly up to the front face $\mathcal{F} = \{x' = 0\}$ and the semiclassical front face $\mathcal{S} = \{h = 0\}$. One can use these coordinates to extend the manifold $X^2_{0,\hbar}$, the lifted diagonal $\mathrm{Diag}_\hbar$, and the operator $\beta_\hbar^* P(h, \sigma, D)$ across the faces $\mathcal{F}$ and $\mathcal{S}$, and by doing so we get an elliptic differential operator of order 2. One can then apply the Hadamard parametrix construction to show that there exist $G_0(\sigma) \in \Psi^{-2}_{0,\hbar}(X)$ and $E_0(\sigma) \in \Psi^{-\infty}_{0,\hbar}(X)$ holomorphic in σ such that $P(h, \sigma, D)G_0(h, \sigma) = \mathrm{Id} + E_0(h, \sigma)$. Moreover, one can cut-off $G_0(h, \sigma)$, and make sure that $G_0(h, \sigma)$, and $E_0(h, \sigma)$ are supported near $\mathrm{Diag}_\hbar$. □

The next step is to remove the error E_0, and we do so in the following

Lemma 5.2. *There exists an operator $G_1(h, \sigma)$ holomorphic in $\sigma \in \Omega_\hbar$, such that*

$$G_1(h, \sigma) = G_{1,0}(h, \sigma) + e^{i\frac{\sigma}{\hbar} r} U_1(h, \sigma),\ G_{1,0}(h, \sigma) \in \Psi^{-\infty}_{0,\hbar}(X),\ U_1(h, \sigma) \in \Psi^{-\infty,\infty,-\frac{n}{2}-1,\infty}_{0,\hbar}(X),$$

where r is defined above, and such that the pull back of kernel $\beta_\hbar^* K_{G_{1,0}}$ is supported near $\mathrm{Diag}_\hbar$, *while $K_{\beta_\hbar^* U_1}$ is supported near the semiclassical front face $\mathcal{S}$, but away from* $\mathrm{Diag}_\hbar$, *and*

$$\begin{aligned} &P(h, \sigma, D)G_1(h, \sigma) - E_0(h, \sigma) = E_1(h, \sigma),\\ &E_1(h, \sigma) = E_1'(h, \sigma) + e^{i\frac{\sigma}{\hbar} r} F_1(h, \sigma),\ \textit{with}\\ &E_1'(h, \sigma) \in \rho_{\mathcal{S}}^\infty \Psi^{-\infty}_{0,\hbar}(X), \quad F_1(h, \sigma) \in \rho_{\mathcal{S}}^\infty \Psi^{-\infty,\infty,-\frac{n}{2},\infty}_{0,\hbar}(X) \end{aligned} \tag{5.8}$$

Moreover, $\beta_\hbar^* K_{E_1}$ is supported near $\mathrm{Diag}_\hbar$, *and hence away from $\mathcal{L}$ and $\mathcal{R}$, $\beta_\hbar^* K_{F_1}$ vanishes to infinite order at the semiclassical front face $\mathcal{S}$ and is of the form $\rho_{\mathcal{A}}^{-\frac{n}{2}} C^\infty$ near the semiclassical face $\mathcal{A}$.*

Notice that the error term E_1 is such that $\beta_\hbar^* E_1'$ vanishes to infinite order at all boundary faces, while the kernel of F_1 lifts to a C^∞ function which is supported near $\mathcal{S}$ (and in particular vanishes to infinite order at the right and left faces), vanishes to infinite order at the semiclassical front face, and its singularity at $\mathcal{A}$ is of the form $\rho_{\mathcal{A}}^{-\frac{n}{2}} C^\infty$, see Fig.5. The proof of this Lemma is quite involved, was carried out in section 5 of [52], and will not be redone here. We will just say that it makes no difference to this construction whether κ is constant or not. The reason is that its main ingredient is the structure of the normal operator at the semiclassical front face, but in this case, on the fiber over a point (x', y'), the normal operator is the

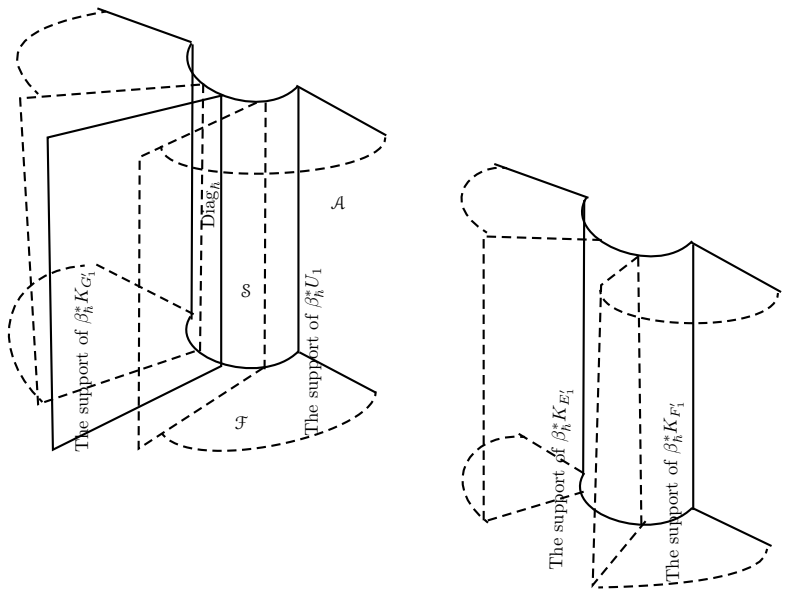

FIGURE 5. The supports of $\beta_\hbar^* G_1$, $\beta_\hbar^* K_{U_1}$, $\beta_\hbar^* K_{E_1'}$ and $\beta_\hbar^* K_{F_1}$.

Laplacian associated with the Euclidean metric $\frac{1}{\kappa(y')} dX^2 + H(x', y', dY)$, and the (x', y') play the role of parameters and do not enter in the proof of asymptotic behavior of the operators described in the lemma.

The lift of the kernel of $E_1' \in \rho_S^\infty \Psi_{0,\hbar}^{-\infty}(X)$ is supported near $\mathrm{Diag}_\hbar$, so it will be ignored from now on, and it will be part of the final error term in the construction of the parametrix. On the other hand, the term lift of the kernel of $e^{-i\frac{\sigma}{\hbar}r} F_1(h, \sigma)$ does not vanish at the semiclassical face $\mathcal{A}$ and therefore cannot be ignored. So we need to find an operator $G_2(\sigma, \hbar)$ such that

$$P(h, \sigma, D) G_2(h, \sigma) - e^{i\frac{\sigma}{\hbar}r} F_1(h, \sigma) = E_2(h, \sigma),$$

where $E_2(h, \sigma)$ vanishes to infinite order at the semiclassical face $\mathcal{A}$. Since $\beta_\hbar^* K_{F_1}$ vanishes to infinite order at the semiclassical face, it follows that $\beta_0^* K_{F_1}$ vanishes to infinite order at $\mathrm{Diag}_0 \times [0, 1)$, and we shall work on $X \times_0 X \times [0, 1)$ rather than on $X_{0,\hbar}^2$.

As pointed out in [52], the construction of $G_1(h, \sigma)$ is the analogue of the semiclassical construction of intersecting Lagrangians of Melrose and Uhlmann [47], which is actually carried out by Chen and Hassell [9].

As suggested above in (3.8) it is natural to try to construct an operator $G_2(h, \sigma)$ such that

$$\beta_0^* G_2(h, \sigma) = e^{-i\frac{\sigma}{\hbar}\tilde{\gamma}} U_2(h, \sigma), \quad \tilde{\gamma} = \mu_R \log \rho_R + \mu_L \log \rho_L,$$

and so we define

$$P_L(h, \sigma, D) = \beta_0^*(h^2(\Delta_{g(z)} - \frac{\kappa_0 n^2}{4}) - \sigma^2), \quad P_R(h, \sigma, D) = \beta_0^*(h^2(\Delta_{g(z')} - \frac{\kappa_0 n^2}{4}) - \sigma^2), \tag{5.9}$$

where R and L indicate the lift of Δ_g from the respective factor of $X \times X$, and

$$\begin{aligned} e^{i\frac{\sigma}{\hbar}\gamma} P_\bullet(h, \sigma, D) e^{-i\frac{\sigma}{\hbar}\gamma} &= P_{\bullet,\gamma}(h, \sigma, D), \ \bullet = L, R, \\ e^{i\frac{\sigma}{\hbar}\tilde{\gamma}} P_\bullet(h, \sigma, D) e^{-i\frac{\sigma}{\hbar}\tilde{\gamma}} &= P_{\bullet,\tilde{\gamma}}(h, \sigma, D), \end{aligned} \tag{5.10}$$

Therefore,

$$\beta_0^*(P(h,\sigma,D)G_2(h,\sigma) - e^{i\frac{\sigma}{h}r}F_1(h,\sigma)) = P_L(h,\sigma,D)e^{-i\frac{\sigma}{h}\tilde{\gamma}}U_2(h,\sigma) - e^{i\frac{\sigma}{h}\beta_0^* r}\beta_0^* K_{F_1(h,\sigma)} = e^{-i\frac{\sigma}{h}\tilde{\gamma}}\left(P_{L,\tilde{\gamma}}(h,\sigma,D)U_2(h,\sigma) - e^{i\frac{\sigma}{h}(\beta_0^* r+\tilde{\gamma})}\beta_0^* K_{F_1(h,\sigma)}\right),$$

But if we choose ρ_R and ρ_L such that with $\rho_R = \rho_L = 1$ on the support of $\beta_0^* K_{F_1}$ and near Diag_0, then $\tilde{\gamma} = 0$ on the support of $\beta_0^* K_{F_1}$ and near Diag_0, and so we should find $U_2(h,\sigma)$ such that

$$P_{L,\tilde{\gamma}}(h,\sigma,D)U_2(h,\sigma) - e^{i\frac{\sigma}{h}\beta_0^* r}\beta_0^* K_{F_1(h,\sigma)} = h^\infty \mathcal{E}(h,\sigma), \quad \mathcal{E} \in \mathcal{K}_{ph}^{\frac{n}{2},\frac{n}{2}}(X \times_0 X \times [0,1)).$$

Near Diag_0, $e^{i\frac{\sigma}{h}\beta_0^* r}F_1$ is a semiclassical Lagrangian distribution with respect to the manifold obtained by flowing-out the subset of the conormal bundle of the diagonal where $\{\beta_0^* p_L = \beta_0^* p_R = 0\}$, ($\beta_0^* p_\bullet$ is the semiclassical principal symbol of $\beta_0^* P_\bullet(h,\sigma,D)$, $\bullet = R, L,$) along the integral curves of $H_{\beta_0^* p_\bullet}$. We will analyze this Lagrangian submanifold in detail before proceeding with the construction of the parametrix.

6. The underlying Lagrangian submanifolds

In this section we will discuss the underlying Lagrangian submanifolds that will be used in the construction of the parametrix, and we assume that $(\mathring{X}, g)$ is a non-trapping CCM.

It is well known that the Riemannian metric g in the interior $\mathring{X}$ induces an isomorphism between the tangent and cotangent bundles of $\mathring{X}$:

$$\begin{aligned} \mathcal{G} : T_z\mathring{X} &\longrightarrow T_z^*\mathring{X} \\ v &\longmapsto g(z)(v,\cdot), \end{aligned} \tag{6.1}$$

which in turn induces a dual metric on $T^*\mathring{X}$ given by

$$g^*(z)(\xi,\eta) = g(z)(\mathcal{G}^{-1}\xi, \mathcal{G}^{-1}\eta). \tag{6.2}$$

We shall denote

$$|\zeta|^2_{g^*(z)} = g^*(z)(\zeta,\zeta).$$

In local coordinates we have

$$g(z)(v,w) = \sum_{i,j} g_{ij}(z)v_i w_j \text{ and } g^*(z)(\xi,\eta) = \sum_{i,j} g^{ij}(z)\xi_i\eta_j,$$
$$\text{where the matrices } (g_{ij})^{-1} = (g^{ij}).$$

The cotangent bundle $T^*\mathring{X}$ equipped with the canonical 2-form ω is a symplectic manifold. In local coordinates (z,ζ) in $T^*\mathring{X}$, $\omega = \sum_{j=1}^{n+1} d\zeta_j \wedge dz_j$. If $f \in C^\infty(T^*\mathring{X};\mathbb{R})$, its Hamilton vector field H_f is defined to be the vector field that satisfies $\omega(\cdot, H_f) = df$, and in local coordinates,

$$H_f = \frac{\partial f}{\partial \zeta}\cdot\frac{\partial}{\partial z} - \frac{\partial f}{\partial z}\cdot\frac{\partial}{\partial \zeta}.$$

We also recall, from for example section 2.7 of [2], that if

$$p(z,\zeta) = \frac{1}{2}(|\zeta|^2_{g^*(z)} - 1), \tag{6.3}$$

the integral curves of the Hamilton vector field H_p are called bicharacteristics, and the projection of the bicharacteristics contained in $\mathcal{N} = \{p = 0\}$ to $\mathring{X}$ are geodesics of the metric g. In other words, if $(z',\zeta') \in T^*\mathring{X}$ and $p(z',\zeta') = 0$, and if $\gamma(r)$ is a curve such that

$$\begin{aligned} \frac{d}{dr}\gamma(r) &= H_p(\gamma(r)), \\ \gamma(0) &= (z',\zeta'), \end{aligned}$$

then, with $\mathcal{G}$ given by (6.1),

$$\gamma(r) = \left(\alpha(r), \mathcal{G}(\frac{d}{dr}\alpha(r))\right), \text{ where}$$
$$\alpha(r) = \exp_{z'}(rv), \quad v \in T_{z'}\mathring{X}, \quad |v|_g^2 = 1, \quad \mathcal{G}(v) = \zeta', \tag{6.4}$$

$\exp_{z'}(r\bullet)$ denotes the exponential map on $T_{z'}\mathring{X}$. We can identify $T^*(\mathring{X}\times\mathring{X}) = T^*\mathring{X}\times T^*\mathring{X}$, and according to this we shall use (z,ζ,z',ζ') to denote a point in $T^*(\mathring{X}\times\mathring{X})$, (z,ζ) will denote a point on the left factor and (z',ζ') will denote a point on the right factor. We shall denote

$$\Lambda_0 = \{(z,\zeta,z',\zeta') : \ z = z', \ \zeta = -\zeta', \ p(z,\zeta) = p(z',\zeta') = 0\}. \tag{6.5}$$

We shall study the manifold obtained by the flow-out of Λ_0 by H_p. In other words,

$$\Lambda = \{(z,\zeta,z',-\zeta') \in T^*(\mathring{X}\times\mathring{X}) \setminus 0 : (z,\zeta)\in\mathcal{N}, (z',-\zeta')\in\mathcal{N}$$
$$\text{lie on the same integral curve of } H_p\}, \tag{6.6}$$

The non-trapping assumption guarantees that $\mathring{X}$ is pseudo-convex with respect to p, see Definition 26.1.10 of [34], and according to Theorem 26.1.13 of [34], Λ is a C^∞ Lagrangian submanifold of $T^*(\mathring{X}\times\mathring{X})$ equipped with the canonical form $\omega = \pi_L^*\omega_L + \pi_R^*\omega_R$, where $\omega_\bullet$ is the canonical form on the $\bullet$-factor, $\bullet = R, L$, $\pi_\bullet : T^*X\times T^*X \mapsto T^*X$ is the projection on the $\bullet$-factor. In canonical coordinates $\omega = d\zeta\wedge dz + d\zeta'\wedge dz'$. Notice that Λ is not conic because we are taking $|\zeta|_{g^*(z)} = |\zeta'|_{g^*(z')} = 1$.

We also observe that $\Lambda\setminus\Lambda_0 = \Lambda_R\cup\Lambda_L$ where

$$\Lambda_L = \{(z,\zeta,z',\zeta')\in\Lambda : \ (z,\zeta) \text{ lies after } (z',-\zeta') \text{ on the bicharacteristic of } H_p\},$$
$$\Lambda_R = \{(z,\zeta,z',\zeta')\in\Lambda : \ (z,\zeta) \text{ lies before } (z',-\zeta') \text{ on the bicharacteristic of } H_p\}.$$

The non-trapping assumption implies that $\Lambda_L\cap\Lambda_R = \emptyset$, as otherwise we would have a closed bicharacteristic. Notice that one can also write

$$\Lambda_L = \{(z,\zeta,z',-\zeta')\in\mathcal{N}\times\mathcal{N} : (z,\zeta) = \exp(tH_p)(z',-\zeta') \text{ for some } t>0\},$$
$$\Lambda_R = \{(z,\zeta,z',-\zeta')\in\mathcal{N}\times\mathcal{N} : (z,\zeta) = \exp(tH_p)(z',-\zeta') \text{ for some } t<0\}, \tag{6.7}$$

where $\exp(tH_p)(z',-\zeta')$ denotes the map that takes $(z',-\zeta')$ to the point obtained by traveling a time t along the integral curve of H_p through the point $(z',-\zeta')$. Therefore,

$$\Lambda = \{(z,\zeta,z',-\zeta')\in\mathcal{N}\times\mathcal{N} : (z,\zeta) = \exp(tH_p)(z',-\zeta') \text{ for some } t\in\mathbb{R}\}, \tag{6.8}$$

Another way of interpreting Λ_L and Λ_R is to define $p_R, p_L \in C^\infty(T^*(\mathring{X}\times\mathring{X}))$ as the function p on the right and left factors, i.e. $p_R = p(z',\zeta')$ and $p_L = p(z,\zeta)$, and then think of Λ_R as the flow-out of Σ under H_{p_R} and of Λ_L as the flow-out of Λ_0 under H_{p_L} for positive times:

$$\Lambda\setminus\Lambda_0 = \bigcup_{t_1>0, t_2>0} \exp(t_1H_{p_R})\circ\exp(t_2H_{p_L})\Lambda_0. \tag{6.9}$$

The map β_0 defined in (2.1) induces a map $\beta_0 : T^*(X\times_0 X) \longmapsto T^*(\mathring{X}\times\mathring{X})$, and we want to understand the behavior of $\beta_0^*\Lambda$ up to $\partial T^*(X\times_0 X)$. Even though $X\times_0 X$ is not a C^∞ manifold, the product structure (2.2) valid in a tubular neighborhood of ∂X can be lifted to $X\times_0 X$ and it gives a way of doubling $X\times_0 X$ across its boundary and extending the metric $\beta_0^*(x^2 g)$, where x is the boundary defining function in (2.2). So we may think of $X\times_0 X$ as a submanifold with corners of an open C^∞ manifold.

It follows from (6.9) that $\beta_0^*\Lambda$ is given by the joint flow-out of the $\beta_0^*\Lambda_0$ by $H_{\beta_0^* p_R}$ and $H_{\beta_0^* p_L}$ and our goal is to understand its behavior up to $\partial T^*(X\times_0 X)$.

Recall, see for example [42, 66], that if $P(z,h,D)$ is a semiclassical differential operator on a manifold M, which in local coordinates is given by $P(z,h,D) = \sum_{|\alpha|\le m} a_\alpha(h,z)(hD_z)^\alpha$, with $D = \frac{1}{i}\partial$, $a_\alpha \in C^\infty([0,1]\times$

M), one defines its semiclassical principal symbol as

$$\sigma^{sc}(P(z,h,D))(z,\zeta) = \sum_{|\alpha|\leq m} a_\alpha(0,z)\zeta^\alpha,$$

and this is invariantly defined as a function on T^*M. Notice that for $\sigma = 1 + h\sigma'$,

$$\sigma^{sc}(h^2(\Delta_g - \frac{\kappa_0 n^2}{4}) - \sigma^2) = |\zeta|^2 - 1. \tag{6.10}$$

If $\varphi \in C^\infty(M)$, and $h \in (0,1)$, we shall encounter operators obtained from $P(h,z,D)$ by conjugation of the type

$$P_\varphi(h,z,D) = e^{i\frac{\varphi}{h}} P(z,h,D) e^{-i\frac{\varphi}{h}} = \sum_{|\alpha|\leq m} a_\alpha(h,z)(hD_z - d\varphi)^\alpha,$$

and hence these remain semiclassical differential operators whose semiclassical principal symbols are given by

$$p_\varphi(h,z,\zeta) = \sum_{|\alpha|\leq m} a_\alpha(0,z)(\zeta - d\varphi)^\alpha = \sigma^{sc}(P(z,h,D))(z,\zeta - d\varphi), \tag{6.11}$$

where for $(z,\zeta) \in T^*M$, $(z,\zeta - d\varphi)$ denotes the shift along the fiber direction by $-d\varphi$. Notice that the transformation $(z,\zeta) \mapsto (z,\zeta - d\varphi)$ preserves the symplectic form of T^*M.

We also obtain semiclassical operators by conjugating standard differential operators $P(z,D) = \sum_{|\alpha|\leq m} a_\alpha(z)D^\alpha$:

$$e^{i\frac{\varphi}{h}} h^m P(z,D) e^{-i\frac{\varphi}{h}} = h^m P(z, D - \frac{1}{h}d\varphi) =$$
$$\sum_{|\alpha|=m} a_\alpha(z)(hD - d\varphi)^\alpha + \sum_{|\alpha|<m} h^{m-|\alpha|} a_\alpha(z)(hD - d\varphi)^\alpha.$$

But in this case, the semiclassical principal symbol of the resulting operator is equal to

$$\sigma^{sc}(e^{i\frac{\varphi}{h}} h^m P(z,D) e^{-i\frac{\varphi}{h}}) = \sum_{|\alpha|=m} a_\alpha(z)(\zeta - d\varphi)^\alpha = \sigma_m(P(z,D))(z,\zeta - d\varphi), \tag{6.12}$$

where $\sigma_m(P(z,D))$ is the principal symbol of $P(z,D)$.

In the present case, we will work with the operators $P_L(h,\sigma,D)$ and $P_R(h,\sigma,D)$ defined in (5.9), with $\sigma = 1 + h\sigma'$, and $\sigma' \in (-c,c) \times i(-C,C)$. If γ is as in (3.9), $P_{\bullet,\gamma}(h,\sigma,D)$ was defined in (5.10), and so, if $p_\bullet(m,\nu)$ denotes the semiclassical principal symbol of $P_\bullet(h,\sigma,D)$, then according to (6.12) the semiclassical principal symbol of $\frac{1}{2}P_{\bullet,\gamma}(h,\sigma,D)$ is given by

$$p_{\bullet,\gamma}(m,\nu) = \frac{1}{2}\sigma^{sc}(P_{\bullet,\gamma}(h,\sigma,D)) = \frac{1}{2}p_\bullet(m,\nu - d\gamma), \tag{6.13}$$

where we used that $\sigma = 1 + h\sigma'$, $\sigma' \in (-c,c) \times i(-C,C)$. This corresponds to a change in the fiber variables, and we denote

$$\begin{aligned} S_\gamma : T^*(X \times_0 X) &\longrightarrow T^*(X \times_0 X) \\ (m,\nu) &\longmapsto (m, \nu - d\gamma). \end{aligned} \tag{6.14}$$

This map is C^∞ in the interior of $T^*(X \times_0 X)$, and preserves the symplectic structure, and observe that $p_{\bullet,\gamma} = p_\bullet \circ S_\gamma$. Observe that if $\tilde{\gamma}$ is as in (3.7), and

$$P_{\bullet,\tilde{\gamma}}(h,\sigma,D) = e^{i\frac{\sigma}{h}\tilde{\gamma}} P_\bullet(h,\sigma,D) e^{-i\frac{\sigma}{h}\tilde{\gamma}},$$

then

$$P_{\bullet,\tilde{\gamma}}(h,\sigma,D) - P_{\bullet,\gamma}(h,\sigma,D) = h^2 Q(h,\sigma,D), \tag{6.15}$$

and hence if $p_{\bullet,\tilde{\gamma}}$ is the principal symbol of $P_{\bullet,\tilde{\gamma}}$,

$$p_{\bullet,\gamma} = p_{\bullet,\tilde{\gamma}}. \tag{6.16}$$

We can now state the main result of this section:

Theorem 6.1. *Let $(\mathring{X}, g)$ be a non-trapping CCM, let $T^*(X \times_0 X)$ denote the cotangent bundle of the manifold $X \times_0 X$. Let ρ_L, ρ_R be boundary defining functions of L and R respectively, let κ_R and κ_L and γ be defined as above. Let $p_{R,\gamma}(m,\nu)$ and $p_{L,\gamma}(m,\nu)$ be defined by (6.13), and let $H_{p_{\bullet,\gamma}}$, $\bullet = R, L$, be the corresponding Hamilton vector fields with respect to the canonical 2-form of $T^*(X \times_0 X)$. Let $\widetilde{\Lambda}_0 = \beta_0^* \Lambda_0$, and let Λ^* denote the Lagrangian submanifold obtained by the joint flow-out of $\widetilde{\Lambda}_0$ under $H_{p_{R,\gamma}}$ and $H_{p_{L,\gamma}}$, in other words*

$$\Lambda^* = \bigcup_{t_1, t_2 \geq 0} \exp(t_1 H_{p_{R,\gamma}}) \circ \exp(t_2 H_{p_{L,\gamma}}) \widetilde{\Lambda}_0. \tag{6.17}$$

Then Λ^* is a C^∞ Lagrangian submanifold in the interior of $T^*(X \times_0 X)$. The behavior of Λ^* at $\partial(T^*(X \times_0 X))$ differs if κ is constant or not constant:

- **I.** *If κ is constant, then Λ^* extends to a C^∞ compact submanifold with corners of $T^*(X \times_0 X)$. Moreover $\Lambda^* \cap T^*_{\{\rho_\bullet = 0\}}(X \times_0 X)$, $\bullet = L, R$, is a C^∞ Lagrangian submanifold of $T^*\{\rho_\bullet = 0\}$ and $\Lambda^* \cap T^*_{\{\rho_R = \rho_L = 0\}}(X \times_0 X)$ is a C^∞ Lagrangian submanifold of $T^*\{\rho_L = \rho_R = 0\}$.*
- **II.** *If $\kappa(y)$ is not constant, Λ^* extends to a compact submanifold with corners of $T^*(X \times_0 X)$, the extension is C^∞ up to the front face, but has polyhomogeneous singularities at $T^*_{\{\rho_R = 0\}}(X \times_0 X)$ and at $T^*_{\{\rho_L = 0\}}(X \times_0 X)$. However, $\Lambda^* \cap T^*_{\{\rho_\bullet = 0\}}(X \times_0 X)$, $\bullet = L, R$, is a C^∞ Lagrangian submanifold of $T^*\{\rho_\bullet = 0\}$ and $\Lambda^* \cap T^*_{\{\rho_R = \rho_L = 0\}}(X \times_0 X)$ is a C^∞ Lagrangian submanifold of $T^*\{\rho_L = \rho_R = 0\}$.*

Moreover, if $(x_0, \xi_0) = (x_{0,3}, \dots, x_{0,2n+2}, \xi_{0,3}, \dots, \xi_{0,2n+2})$ are local symplectic coordinates in $T^*\{\rho_R = \rho_L = 0\}$, valid near $q \in T^*\{\rho_L = \rho_R = 0\} \cap \Lambda^*$ such that $L \cap R \cap \mathrm{ff} = \{x_{0,3} = 0\}$, then there exist symplectic local coordinates (x, ξ) in $T^*(X \times_0 X)$ valid near q in which $L = \{x_1 = 0\}$, $R = \{x_2 = 0\}$, $\mathrm{ff} = \{x_3 = 0\}$, and such that on Λ^*, and for $3 \leq m \leq 2n+2$,

$$\begin{aligned}
x_m = x_m(x_1, x_2, x_0, \xi_0) &\sim x_{0,m} + \sum_{j_1, j_2 = 1}^{\infty} \sum_{k_1 = 0}^{j_1} \sum_{k_2 = 0}^{j_2} x_1^{j_1} (\log x_1)^{k_1} x_2^{j_2} (\log x_2)^{k_2} X_{m, j_1, j_2, k_1, k_2}(x_0, \xi_0), \\
\xi_1 = \xi_1(x_1, x_2, x_0, \xi_0) &\sim \sum_{j_1, j_2 = 1}^{\infty} \sum_{k_1 = 0}^{j_1+1} \sum_{k_2 = 0}^{j_2+1} x_1^{j_1} (\log x_1)^{k_1} x_2^{j_2} (\log x_2)^{k_2} \Xi_{1, j_1, j_2, k_1, k_2}(x_0, \xi_0), \\
\xi_2 = \xi_2(x_1, x_2, x_0, \xi_0) &\sim \sum_{j_1, j_2 = 1}^{\infty} \sum_{k_1 = 0}^{j_1+1} \sum_{k_2 = 0}^{j_2+1} x_1^{j_1} (\log x_1)^{k_1} x_2^{j_2} (\log x_2)^{k_2} \Xi_{2, j_1, j_2, k_1, k_2}(x_0, \xi_0), \\
\xi_m = \xi_m(x_1, x_2, x_0, \xi_0) &\sim \xi_{0,m} + \sum_{j_1, j_2 = 1}^{\infty} \sum_{k_1 = 0}^{j_1+1} \sum_{k_2 = 0}^{j_2+1} x_1^{j_1} (\log x_1)^{k_1} x_2^{j_2} (\log x_2)^{k_2} \Xi_{m, j_1, j_2, k_1, k_2}(x_0, \xi_0),
\end{aligned} \tag{6.18}$$

where the coefficients $X_{\star, j_1, j_2, k_1, k_2}$ and $\Xi_{\star, j_1, j_2, k_1, k_2}$, $\star = 1, 2, \dots, 2n+2$, are C^∞ functions. Similar expansions are valid near the right and left faces, away from the corner.

The main point in (6.18) is that the x_m variables have polyhomogeneous expansions in (x_1, x_2), according to (2.7), but the expansions of the ξ_m variables are only a little worse, and the power of the $\log x$ term can be at most one order higher than the power of x. The proof of Theorem 6.1 will be done at the end of this section after a sequence of lemmas. One can see that the result of Theorem 6.1 is independent of the extension of κ or the choice of ρ_R or ρ_L. If ρ_L^*, ρ_R^* are boundary defining functions of the left and right faces, then $\rho_L = \rho_L^* e^{f_L}$ and $\rho_R = \rho_R^* e^{f_R}$ for some $f_L, f_R \in C^\infty(X \times_0 X)$. Therefore $\gamma^* - \gamma = \frac{1}{\kappa_L} f_L + \frac{1}{\kappa_R} f_R$, and the map $(m, \nu) \mapsto (m, \nu + d(\gamma - \gamma^*))$ is a global symplectomorphism of $T^*(X \times_0 X)$, and so it does not change the structure of the manifold Λ^*. Similarly, if $\frac{1}{\kappa_\bullet} - \frac{1}{\tilde{\kappa}_\bullet} = \rho_\bullet f_\bullet$, with $f_\bullet \in C^\infty$, $\bullet = R, L$, then $\gamma - \tilde{\gamma} = \rho_R \log \rho_R f_R + \rho_L \log \rho_L f_L$, and this will only introduce polyhomogeneous terms which one can check will not affect the proof.

The main point in the proof of Theorem 6.1 is that Diag_0 does not intersect R or L and intersects ff transversally, see Fig.2. We will show that if $\wp_\bullet = \frac{1}{\rho_\bullet} p_{\bullet,\gamma}$, $\bullet = R, L$, the vector fields $H_{\wp_\bullet}$ are C^∞ in the interior of $T^*(X \times_0 X)$ and up to ff, and are tangent to ff. Moreover if κ is constant, $H_{\wp_\bullet}$ is C^∞ up to $\partial T^*(X \times_0 X)$ and transversal to $\{\rho_\bullet = 0\}$, and so Λ^* extends up to $\partial T^*(X \times_0 X)$. When κ is not constant $H_{\wp_\bullet}$ has logarithmic singularities at $\{\rho_\bullet = 0\}$, but its integral curves are well defined up to $\{\rho_\bullet = 0\}$, and hence the manifold Λ^* extends up to $\partial T^*(X \times_0 X)$, but with polyhomogeneous singularities. In the case of AHM, this was observed in [9, 64], and in [52] in the particular case where (X, g) is a perturbation of the hyperbolic space.

The first lemma describes the behavior of the vector fields $H_{\wp_\bullet}$, $\bullet = R, L$ up to the boundary.

Lemma 6.2. *Let $p_{\bullet,\gamma}$ be defined in* (6.13)*, and let $\wp_\bullet = \frac{1}{\rho_\bullet} p_{\bullet,\gamma}$, $\bullet = R, L$. If κ is constant, then $\wp_\bullet$ is C^∞ up to $\partial T^*(X \times_0 X)$, is transversal to $\{\rho_\bullet = 0\}$ and is tangent to the other two faces. If κ is not constant $\wp_\bullet$ has polyhomogeneous singularities at $\{\rho_\bullet = 0\}$, but it is smooth up to the other two faces and tangent to both. If $x = (x_1, \dots, x_{n+1})$ are local coordinates in $X \times_0 X$ in which $L = \{x_1 = 0\}$, $R = \{x_2 = 0\}$, and* ff $= \{x_3 = 0\}$*, and if $\xi = (\xi_1, \dots, \xi_{2n+2})$ denotes the dual variable to x, then $H_{\wp_L}$ satisfies*

$$H_{\wp_L} = A_1(x,\xi)\partial_{x_1} + A_2(x,\xi)x_2\partial_{x_2} + A_3(x,\xi)x_3\partial_{x_3} + \sum_{k=4}^{2n+2} A_k(x,\xi)\partial_{x_k} + \sum_{k=1}^{2n+2} \widetilde{A}_k(x,\xi)\partial_{\xi_k},$$

where

$$\begin{aligned} A_1(x,\xi) &= -\kappa_L + G_1(x)x_1^2 \log x_1 + x_1 \sum_{k=1}^{2n+2} B_{1k}(x)\xi_k, \\ A_j(x,\xi) &= F_j(x) + G_j(x)x_1 \log x_1 + x_1 \sum_{k=1}^{2n+2} B_{jk}(x)\xi_k,\ 2 \le j \le 2n+2, \\ \widetilde{A}_j(x,\xi) &= \widetilde{F}_j(x) + E_j(x)\log x_1 + D_j(x)(\log x_1)^2 + \sum_{k=1}^{2n+2} \widetilde{B}_{jk}(x)\xi_j + \\ &\quad \sum_{k=1}^{2n+2} (\log x_1) C_{jk}(x)\xi_j + \sum_{k,l=1}^{2n+2} F_{jkl}(x)\xi_k\xi_l, \end{aligned} \tag{6.19}$$

where F_j, $\widetilde{F}_j$, G_j, B_{jk}, $\widetilde{B}_{jk}$, C_{jk}, D_j, E_j and F_{jkl}, and are C^∞ functions. When κ is constant all the coefficients of $\log x_1$ and $(\log x_1)^2$ are equal to zero. The formula for the vector field $H_{\wp_R}$ is obtained from this one by switching x_1 and x_2, ξ_1 and ξ_2.

Proof. First, observe that if $\tilde{x}$ are coordinates in which $L = \{\tilde{x}_1 = 0\}$, $R = \{\tilde{x}_2 = 0\}$ and ff $= \{\tilde{x}_3 = 0\}$, then $x_j = X_j(\tilde{x})\tilde{x}_j$, $j = 1, 2, 3$, where $X_j(\tilde{x}) > 0$, The dual variables $\tilde{\xi}_j$ would be linear combinations of ξ_j with C^∞ coefficients depending on x only. Therefore the vector fields $H_{\wp_\bullet}$ would have the same form in the new coordinates.

We choose a boundary defining function x such that (2.2) holds. We shall use (x, y) to denote coordinates on the left factor, while (x', y') denote coordinates on the right factor. In this case Δ_g on the left factor is given by (2.3) and therefore for $\sigma = 1 + h\sigma'$,

$$\begin{aligned} h^2(\Delta_{g(z)} - \frac{\kappa_0 n^2}{4}) - \sigma^2 &= \big(\kappa(y)^2(xhD_x)^2 + x^2 H^{jk}(x,y)hD_{y_j}hD_{y_k} - 1\big) - \\ & ih\kappa(y)^2(n + xF(x,y))xhD_x + ih\sum_j B_k x^2 hD_{y_k} - h^2\frac{\kappa_0 n^2}{4} - 2h\sigma' - h^2\sigma'^2. \end{aligned} \tag{6.20}$$

We will find $P_L(h,m,D-d\gamma)=P_{L,\gamma}(h,m,D)$, compute $\wp_L$ and $H_{\wp_L}$. We work in local coordinates valid near $\partial(X\times_0 X)$ and we divide it in four regions and work in projective coordinates valid in each region:

A. Near L and away from $R\cup \mathrm{ff}$, or near R and away from $L\cup\mathrm{ff}$.
B. Near $L\cap\mathrm{ff}$ and away from R, or near $R\cap\mathrm{ff}$ and away from L.
C. Near $L\cap R$ but away from ff.
D. Near $L\cap R\cap\mathrm{ff}$.

First we analyze region A, near L but away from R and ff. The case near R but away from L and ff is identical. Since we are away from R, we have $\rho_R>\delta$, for some $\delta>0$, and hence $\log\rho_R$ is C^∞. In this region we may take $x_1=x$ as a defining function of L, we set $\gamma=\frac{1}{\kappa(y)}\log x_1$. We shall denote the other coordinates $y=(x_2,\dots,x_{2n+2})$ and the respective dual variables by η. Even though this does not match the notation of the statement of the lemma, it would be more confusing if we renamed the y variables.

Also observe that the map $(x,\xi)\longmapsto(x,\xi-d(\frac{1}{\kappa_R}\log\rho_R))$ is C^∞ in the region where $\rho_R>\delta$, it does not affect the form of the vector fields in (6.19), hence the statements about $\wp_L$ in the lemma are true in this region whether we take $\gamma=\frac{1}{\kappa(y)}\log x_1+\frac{1}{\kappa_R}\log\rho_R$. In the case near R but away from L and ff one sets $x_2=x'$ and $\gamma=\frac{1}{\kappa(y')}\log x_2$.

We see from (6.13) and (6.20) that

$$p_{L,\gamma}(x_1,y,\xi_1,\eta)=\frac12 p_L(x_1,y,\xi_1-\partial_{x_1}\gamma,\eta-\partial_y\gamma)=$$
$$\frac12\kappa(y)^2(x_1\xi_1-\frac{1}{\kappa(y)})^2+\frac12 x_1^2H^{jk}(x_1,y)(\eta_j-a_j\log x_1)(\eta_k-a_k\log x_1)-\frac12,$$
$$\text{where } a_j=\partial_{y_j}\kappa(y)^{-1},$$

and so

$$\wp_L=\frac{1}{x_1}p_{L,\gamma}=-\kappa(y)\xi_1+\frac12\kappa(y)^2x_1\xi_1^2+\frac12 x_1H^{jk}(x_1,y)(\eta_j-a_j\log x_1)(\eta_k-a_k\log x_1). \tag{6.21}$$

Of course there are no $\log x_1$ terms when κ is constant, and it follows from a direct computation that $H_{\wp_L}$ is of the desired form.

Next we work in region B near $L\cap\mathrm{ff}$, but away from R. The case near $R\cap\mathrm{ff}$ but away from L is very similar. In this case, $\rho_R=x'/\rho_{\mathrm{ff}}>\delta$, $\rho_{ff}^2=x^2+x'^2+|y-y'|^2$, and so it is more convenient to use projective coordinates

$$x_1=\frac{x}{x'},\quad x_3=x',\quad Y=\frac{y-y'}{x'},\ \text{and } y'. \tag{6.22}$$

In this case, x_1 is a boundary defining function for L and x_3 is a boundary defining function for ff, and it suffices to take $\gamma=a(y'+x_3Y)\log X$, where $a=\frac{1}{\kappa}$. Therefore, if ξ_j and η_j denote the dual variables to x_j and Y_j,

$$p_{L,\gamma}(x_1,Y,x_3,y',\xi,\eta)=\frac12 p_L(x_1,Y,x_3,y',\xi_1-\partial_{x_1}\gamma,\eta-\partial_Y\gamma)=$$
$$\frac12\kappa^2(y'+x_3Y)(x_1\xi_1-\frac{1}{\kappa(y'+x_3Y)})^2+$$
$$\frac12 x_1^2H^{jk}(x_3X,y'+x_3Y)(\eta_j-a_j(y'+x_3Y)\log x_1)(\eta_k-a_k(y'+x_3Y)\log x_1)-\frac12,$$

where $a_j=\partial_{y_j}a$, and so we conclude that

$$\begin{aligned}\wp_L=&-\kappa(y'+x_3Y)\xi_1+\frac12\kappa^2(y'+x_3Y)x_1\xi_1^2+\\&\frac12 x_1H^{jk}(x_3x_1,y'+x_3Y)(\eta_j-a_j\log x_1)(\eta_k-a_k\log x_1),\end{aligned} \tag{6.23}$$

and hence (6.19) follows from a direct computation. Again, when κ is constant, $a_j=0$, and there are no $\log x_1$ terms, so $H_{\wp_L}$ is C^∞ and $H_{\wp_L}$ is transversal to L.

In region C, near $L\cap R$ and away from ff, $x=x_1$ and $x'=x_2$ are boundary defining functions for L and R respectively. In this case, as discussed above, we may define

$$\gamma = a(y)\log x_1 + a(y')\log x_2, \text{ where } a(y)=\frac{1}{\kappa(y)}.$$

Since we are working with $P_{L,\gamma}$, the operator does not have derivatives in D_{x_2} or $D_{y'}$, and the computations are exactly the same as in region A. Since $H_{\wp_L}$ does not have a term in ∂_{x_3}, it is tangent to $\{x_3=0\}=R$.

Finally, we analyze region D near the co-dimension 3 corner ($L\cap\text{ff}\cap R$). We work in projective coordinates, and as in [52], set $\rho_{\text{ff}}=y_1-y_1'\geq 0$ and define projective coordinates

$$x_3=y_1-y_1',\quad x_1=\frac{x}{y_1-y_1'},\quad x_2=\frac{x'}{y_1-y_1'},\quad y' \text{ and } Y_j=\frac{y_j-y_j'}{y_1-y_1'},\quad j=2,3,\cdots n. \tag{6.24}$$

Here $x_3=\rho_{\text{ff}}$, $x_1=\rho_L$ and $x_2=\rho_R$, are boundary defining functions for ff L and R faces respectively. Then

$$\begin{gathered} x\partial_x = x_1\partial_{x_1},\quad x\partial_{y_j}=x_1\partial_{Y_j},\quad j\geq 2,\\ x\partial_{y_1}=x_1(x_3\partial_{x_3}-x_1\partial_{x_1}-x_2\partial_{x_2}-Y_j\partial_{Y_j}),\end{gathered} \tag{6.25}$$

where a repeated index indicate sum over that index. In these coordinates,

$$\gamma=\frac{1}{\kappa_R}\log x_2-\frac{1}{\kappa_L}\log x_1\quad \kappa_R=\kappa(y'),\ \kappa_L=\kappa(x_3+y_1',y_2'+x_3Y_2,\dots,y_n'+x_3Y_n)$$

If $(\xi_1,\xi_2,\xi_3,\eta_j,\eta_j')$ denote the dual variables to (x_1,x_2,x_3,Y,y'), then substituting ξ_j by $\xi_j-\partial_{x_j}\gamma$, η_j by $\eta_j-\partial_{y_j}\gamma$, we find that

$$\begin{gathered} p_{L,\gamma}=\frac{1}{2}\kappa_L^2(x_1\xi_1-\frac{1}{\kappa_L})^2+\frac{1}{2}x_1^2H^{jk}(x_1x_3,y'+x_3Y)\mathcal{U}_j\mathcal{U}_k-\frac{1}{2},\\ \text{where } \mathcal{U}_1=x_3\xi_3-x_1\xi_1-x_2\xi_2-Y_j\eta_j+a_L+a_R+a_1x_3\log x_1,\quad a_\bullet=\frac{1}{\kappa_\bullet},\\ a_1=\partial_{y_1'}a_L,\ a_j=\partial_{Y_j}a_L,\ \mathcal{U}_j=Y_j\eta_j-a_j\log x_1,\ 2\leq j\leq n,\end{gathered}$$

and therefore,

$$\wp_L=-\kappa_L\xi_1+\frac{1}{2}\kappa_L^2x_1\xi_1^2+\frac{1}{2}x_1H^{jk}(x_1x_3,y'+x_3Y)\mathcal{U}_j\mathcal{U}_k. \tag{6.26}$$

Now we have to verify that $H_{\wp_L}$ matches (6.19). Let us consider the coefficients A_j first. They are obtained by differentiating $\wp_L$ in ξ_j or η_j, but $\wp_L$ is a polynomial of degree two in the dual variables (ξ,η) with C^∞ coefficients depending on (x,Y,y'). So the A_j should be polynomials of degree one in (ξ,η) with C^∞ coefficients depending on the base variables. Notice that the second order terms are of the form $x_1\xi_j\xi_k$ or $x_1\xi_j\eta_k$, so the terms of degree one in ξ are of the form $x_1B_{jk}\xi_k$. As for the log terms, they only appear in $x_1\mathcal{U}_j\mathcal{U}_k$ terms, but $\partial_{\xi_m}(x_1\mathcal{U}_j\mathcal{U}_k)=x_1\mathcal{U}_j\partial_{\xi_m}\mathcal{U}_k+x_1\mathcal{U}_k\partial_{\xi_m}\mathcal{U}_j$, and this shows the general form of A_j. Now the special form of A_1 comes from differentiating the first two terms in (6.26) with respect to ξ_1. Similarly, only the terms $x_1\mathcal{U}_1\mathcal{U}_j$, $1\leq j\leq n$, contain ξ_2 and ξ_3, but in fact these show up as $x_2\xi_2$ and $x_3\xi_3$, so when we differentiate this product all the terms have a factor x_1x_2 in the case of $A_2(x,\xi)$ and x_1x_3 in the case of $A_3(x,\xi)$.

For the $\widetilde{A}_j(x,\xi)$ terms, when we differentiate $\wp_L$ in (x,Y,y') get a polynomial of degree at most two in (ξ,η). This describes the general form of $\widetilde{A}_j(x,\xi)$. Perhaps the only issue is the appearance of the log terms, and nothing worse. When ∂_{x_1} hits the log term in $\mathcal{U}_j$, the x_1 term in front of H^{jk} cancels the term in $\frac{1}{x_1}$. The $\log x_1$ terms come from either $\partial_{x_j}(x_1H^{jk}\mathcal{U}_j\mathcal{U}_k)$ or $\partial_{Y_j}(x_1H^{jk}\mathcal{U}_j\mathcal{U}_k)$, and are as in (6.19). This concludes the proof of the Lemma. □

Next we need to prove that integral curves of $H_{\wp_\bullet}$ extend up to $\{\rho_\bullet=0\}$ and have the polyhomogeneous expansions stated in (6.18). We want to use x_1 as the parameter along the integral curves of $H_{\wp_\bullet}$. According

to (6.19), the coefficient of ∂_{x_1} of $H_{\wp_L}$ is equal to

$$A_1(x,\xi) = -\kappa_L(x) + G_1(x)x_1^2 \log x_1 + \sum_k B_{m,k}(x)x_1\xi_k,$$

and since $\kappa(y) \geq \kappa_0 > 0$, it follows that near any point (x_0,ξ_0) with $x_{01} = 0$, we have the following asymptotic expansion

$$A_1(x,\xi)^{-1} \sim -\frac{1}{\kappa_L} + \sum_{k+|\alpha|\geq 1} (x_1^2 \log x_1)^k (x_1\xi)^\alpha H_{k,\alpha}(x), \text{ where}$$
$$H_{k,\alpha} \in C^\infty,\ \alpha = (\alpha_1,\dots,\alpha_{2n+2}) \in \mathbb{N}^{2n+2},\ (x_1\xi)^\alpha = (x_1\xi_1)^{\alpha_1}\dots(x_1\xi_{2n+2})^{\alpha_{2n+2}}.$$

So, if we divide $H_{\wp_L}$ by $A_1(x,\xi)$ we obtain a vector field which has the following asymptotic expansion near (x_0,ξ_0) :

$$A_1(x,\xi)^{-1}H_{\wp_L} \sim \partial_{x_1} + \sum_{j=2}^{2n+2} A_j(x,\xi)B_j(x,x_1\log x_1,x_1\xi)\partial_{x_j} + \sum_{j=1}^{2n+2} \widetilde{A}_j(x,\xi)\widetilde{B}_j(x,x_1\log x_1,x_1\xi)\partial_{\xi_j},$$

where $A_j(x,\xi)$ and $\widetilde{A}_j(x,\xi)$ are as in (6.19) and

$$B_j(x,x_1\log x_1,x_1\xi) \sim \sum_{k,\alpha}(x_1\log x_1)^k(x_1\xi)^\alpha B_{j,k,\alpha}(x),\quad B_{j,k,\alpha}\in C^\infty,$$
$$\widetilde{B}_j(x,x_1\log x_1,x_1\xi) \sim \sum_{k,\alpha}(x_1\log x_1)^k(x_1\xi)^\alpha \widetilde{B}_{j,k,\alpha}(x),\quad \widetilde{B}_{j,k,\alpha}\in C^\infty.$$

Now we need the following result about polyhomogeneous odes:

Lemma 6.3. *Let $U,V\subset\mathbb{R}^n$ be open subsets with $\overline{U}\subset V$, and let $F_m(x,y)\in C^\infty((0,1)\times V)$, $1\leq m\leq n$ be such that there exist $C>0$, $M>0$ and $N\in\mathbb{N}$ be such that*

$$\begin{aligned} |F_m(x,y)| &\leq C(-\log x)^N,\quad x\in(0,1),\quad y\in V,\\ |\nabla_y F_m(x,y)| &\leq M(-\log x)^N\quad x\in(0,1),\quad y\in V. \end{aligned} \tag{6.27}$$

Then for any $p=(p_1,\dots,p_n)\in U$ there exists $\varepsilon>0$ such that for $1\leq m\leq n$, the initial value problem

$$\begin{aligned} \frac{dy_m}{dx} &= F_m(x,y),\quad 1\leq m\leq n,\\ y_m(0) &= p_m \end{aligned} \tag{6.28}$$

has a unique solution $y(x)=(y_1(x),\dots,y_n(x))$, with $y(x)\in V$ for $x\in[0,\varepsilon)$. Moreover, if for $x\in(0,1)$, $y\in V$, one has $y=(y',y'')$, $y'=(y_1,\dots,y_k)$, $y''=(y_{k+1},\dots,y_n)$, and the functions $F_m(x,y)$ have asymptotic expansions of the type

(6.29)

$$F_m(x,y) \sim \sum_{j,\alpha}^{\infty}(x\log x)^j(xy'')^\alpha B_{m,j,\alpha}(x,y'),\ B_{m,j,\alpha}\in C^\infty \text{ if } 1\leq m\leq k, \text{ and}$$

$$F_m(x,y) \sim \sum_{j,\alpha}^{\infty}(x\log x)^j(xy'')^\alpha\left(B_{m,j,\alpha}(x,y') + (\log x)C_{m,j,\alpha}(x,y') + (\log x)^2 D_{m,j,\alpha}(x,y')\right) +$$
$$\sum_{j,\alpha}^{\infty}(x\log x)^j(xy'')^\alpha\left(\sum_{r=k+1}^{n} y_r E_{r,m,j,\alpha}(x,y') + (\log x)y_r\widetilde{E}_{r,m,j,\alpha}(x,y') + \sum_{r,s=k+1}^{n} y_r y_s F_{r,s,m,j,\alpha}(x,y')\right),$$
$$\text{if } k+1\leq m\leq n,\ B_{m,j},C_{m,j},D_{m,j},E_{r,m,j},F_{r,s,m,j}\in C^\infty,$$

then $y_m(x)$, $1 \le m \le n$, *have the following polyhomogeneous expansions at* $\{x = 0\}$:

$$
\begin{aligned}
y_m(x) - p_m &\sim \sum_{j=1}^{\infty}\sum_{k=0}^{j} x^j (\log x)^k Y_{j,k,m}(p), \quad Y_{j,k,m} \in C^\infty(U), \quad 1 \le m \le k, \\
y_m(x) - p_m &\sim \sum_{j=1}^{\infty}\sum_{k=0}^{j+1} x^j (\log x)^k Y_{j,k,m}(p), \quad Y_{j,k,m} \in C^\infty(U), \quad k+1 \le m \le n.
\end{aligned} \tag{6.30}
$$

in the sense that for any $J \in \mathbb{N}$ *and* $\mu > 0$,

$$
\left| y_m(x) - p_m - \sum_{j=1}^{J}\sum_{k=0}^{j+\bullet} x^j (\log x)^k Y_{j,k,m}(p) \right| \le C(J,\varepsilon) x^{J-\mu}, \tag{6.31}
$$

$$
\bullet = 0 \text{ if } m \le k, \text{ and } \bullet = 1 \text{ otherwise.}
$$

Proof. We will use a contraction argument in an appropriately defined space of functions to prove the existence and uniqueness of the solution. We will then show that the asymptotic expansion is valid for the unique solution. Let $\delta > 0$ be small enough so that

$$
\text{if } p \in U, \quad Q(p,\delta) = \{y \in V : |y_j - p_j| \le \delta, \quad 1 \le j \le n\} \subset V,
$$

and for $\varepsilon > 0$ let

$$
\mathcal{C} = C\left([0,\varepsilon]; Q(p,\delta)\right) = \{\phi : [0,\varepsilon] \longrightarrow Q(p,\delta) \text{ continuous } \}
$$

$$
\text{equipped with the norm } ||\phi|| = \sup_{x\in[0,\varepsilon]} |\phi(x)|
$$

For $\phi \in \mathcal{C}$ we define the map $T(\phi) = (T_1(\phi), \dots, T_n(\phi))$, where

$$
T_m(\phi(x)) = p_m + \int_0^x F_m(t, \phi(t))\, dt, \quad 1 \le m \le n.
$$

Then in view of the second inequality in (6.27), given two functions $\phi, \psi \in \mathcal{C}$,

$$
|T_m(\phi)(x) - T_m(\psi)(x)| \le M||\phi - \psi|| \int_0^x (-\log t)^N\, dt
$$

But since

$$
\int_0^x (-\log t)^N\, dt = xN! \sum_{r=0}^{N} \frac{1}{r!}(-\log x)^r,
$$

we conclude that for $x << 1$,

$$
\int_0^x (-\log t)^N\, dt \le N! x(-\log x)^N, \tag{6.32}
$$

and therefore

$$
|T_m(\phi)(x) - T_m(\psi)(x)| \le MN! x(-\log x)^N ||\phi - \psi||.
$$

The function $x(-\log x)^N$ is increasing in the interval $(0, e^{-N})$, and so if $x < \varepsilon$ and $\varepsilon < e^{-N}$,

$$
||T_m(\phi)(x) - T_m(\psi)(x)|| \le MN! \varepsilon(-\log \varepsilon)^N ||\phi - \psi||
$$

and we pick $\varepsilon > 0$ such that $\varepsilon < e^{-N}$ and

$$
MN!\sqrt{n}\varepsilon(-\log \varepsilon)^N < 1. \tag{6.33}
$$

With this value of ε, we need to find δ which guarantees that $T : \mathcal{C} \longmapsto \mathcal{C}$. Now we use the first inequality in (6.27) to deduce that if $Q(p,\delta) \subset V$, and $\phi \in \mathcal{C}$,

$$
|T_m(\phi(x)) - p_m| \le C \int_0^x (-\log t)^N\, dt.
$$

Again because of (6.32) we conclude that

$$|T_m(\phi) - p_m| \leq CN!\varepsilon(-\log\varepsilon)^N.$$

We pick

$$\begin{gathered}\delta = CN!\sqrt{n}\varepsilon(-\log\varepsilon)^N, \text{ with } \varepsilon \text{ small enough} \\ \text{such that } Q(p,\delta) \subset V, \quad \forall p \in U.\end{gathered} \tag{6.34}$$

Also, in view of the first inequality in (6.27),

$$|T_m(\phi)(x+h) - T_m(\phi)(x)| \leq C||\phi|| \int_x^{x+h} (-\log t)^N \, dt,$$

and so $T_m(\phi)$ is continuous. Therefore with ε and δ such that (6.33) and (6.34) hold, we have shown that $T : \mathcal{C} \longmapsto \mathcal{C}$, and T is a contraction. Since $\mathcal{C}$ is a complete metric space, T has a unique fixed point $y(x) = (y_1(x), \ldots, y_n(x))$ which satisfies

$$y_m(x) = p_m + \int_0^x F_m(t, y(t)) \, dt, \quad 1 \leq m \leq n.$$

Therefore, y is differentiable in $x > 0$ and satisfies (6.28). We still need to prove that if $F_m(x,y)$ satisfies (6.29), then $y_m(x)$ satisfies (6.30), $1 \leq m \leq n$.

Let $\phi, \psi \in \mathcal{C}$, and consider the sequence $T^J\phi$ and $T^J\psi$, $J \in \mathbb{N}$. From the definition

$$T_m^J\phi(x) - T_m^J\psi(x) = \int_0^x \left(F_m(t, T^{J-1}\phi(t)) - F_m(t, T^{J-1}\psi(t))\right) \, dt, \quad 1 \leq m \leq n,$$

and so from (6.27),

$$\left|T_m^J\phi(x) - T_m^J\psi(x)\right| \leq M \int_0^x (-\log t)^N |T^{J-1}\phi(t) - T^{J-1}\psi(t)| \, dt.$$

Iterating this formula we obtain

$$\begin{gathered}\left|T_m^J\phi(x) - T_m^J\psi(x)\right| \leq \\ M^J \int_0^x (-\log t)^N \int_0^t (-\log t_1)^N \ldots \int_0^{t_{J-1}} (-\log t_J)^N |\phi(t_J) - \psi(t_J)| \, dt_J \, dt_{j-1} dt_{j-2} \ldots dt_1 dt \leq \\ \left(M \int_0^x (-\log t)^N \, dt\right)^J ||\phi - \psi||.\end{gathered}$$

We then deduce from (6.32) that

$$\left|T_m^J\phi(x) - T_m^J\psi(x)\right| \leq (MN!x(-\log x)^N)^J ||\phi - \psi||.$$

Now, for J fixed and $r \in \mathbb{N}$, one can write

$$T^{J+r+1}(\phi) - T^J(\phi) = \sum_{\alpha=0}^{r} (T^{J+\alpha}(T\phi) - T^{J+\alpha}(\phi)),$$

and we conclude that, with our choice of ε,

$$\begin{aligned}\left|T^{J+r+1}(\phi)(x)-T^J(\phi)(x)\right| &\leq \sum_{\alpha=0}^{r}|T^{J+\alpha}(T\phi)-T^{J+\alpha}(\phi)| \leq \\ \sum_{\alpha=0}^{r}[MN!x(-\log x)^N]^{J+\alpha}\ ||T\phi-\phi|| &\leq \\ ||T\phi-\phi||(MN!x(-\log x)^N)^J\sum_{\alpha=0}^{\infty}(MN!\varepsilon(-\log\varepsilon)^N)^\alpha &= \\ ||T\phi-\phi||(MN!x(-\log x)^N)^J\frac{1}{1-MN!\varepsilon(-\log\varepsilon)^N}&.\end{aligned} \tag{6.35}$$

Since T is a contraction, if one picks any $\phi\in\mathcal{C}$, the sequence defined by $\phi_k=T(\phi_{k-1})$, and $\phi_0=\phi$ converges to the solution y uniformly. So we pick $\phi=p$, and by taking the limit as $r\to\infty$ in (6.35) we deduce that for any $L\in\mathbb{N}$ and $\mu>0$, there exists $C_{L,\mu}>0$ such that

$$\left|y(x)-T^L(p)(x)\right|\leq C_{L,\mu}x^{L-\mu},$$

and so we only need to show that, fixed L, then in the sense of (6.31),

$$\begin{aligned}T_m^L(p)-p_m &\sim \sum_{j=1}^{\infty}\sum_{k=0}^{j}x^j(\log x)^kF_{L,j,k}(p)\quad F_{L,j,k}(p)\in C^\infty(U),\quad m\leq k \text{ and}\\ T_m^L(p)-p_m &\sim \sum_{j=1}^{\infty}\sum_{k=0}^{j+1}x^j(\log x)^kF_{L,j,k}(p)\quad F_{L,j,k}(p)\in C^\infty(U),\quad k+1\leq m\leq n.\end{aligned} \tag{6.36}$$

We prove this by induction in L and begin with $L=1$. From the definition of T,

$$T_m(p)(x)-p_m=\int_0^x F_m(t,p)\ dt,\quad 1\leq m\leq n.$$

But since the coefficients of the expansions in (6.29) are C^∞ functions of the type $B(x,y')$, then $B(x,p')\sim\sum_{j=0}^{\infty}B_j(p')x^j$, $B_j(p')=\frac{1}{j!}\partial_x^jB(x,p')|_{x=0}$,

$$\begin{aligned}F_m(t,p) &\sim \sum_{j,l,\alpha}t^l(t\log t)^j(tp'')^\alpha\widetilde{B}_{m,j,l,\alpha}(p'),\quad 1\leq m\leq k,\\ F_m(t,p) &\sim \sum_{j,l,\alpha}t^l(t\log t)^j(tp'')^\alpha(\widetilde{F}_{m,j,l,\alpha}(p)+(\log t)\widetilde{F}_{1,m,j,l,\alpha}(p)+(\log t)^2\widetilde{F}_{2,m,j,l\alpha}(p),)\quad k+1\leq m\leq n.\end{aligned} \tag{6.37}$$

But since for $j,k\in\mathbb{N}_0$,

$$\int_0^x t^j(\log t)^kdt=\frac{x^{j+1}}{j+1}\sum_{r=0}^{k}\frac{(-1)^r}{(j+1)^r}\frac{k!}{(k-r)!}(\log x)^{k-r}, \tag{6.38}$$

and so (6.36) is satisfied for $L=1$.

Suppose that (6.36) is correct for L. So we write

$$T_m^{L+1}(p)(x)-p_m=\int_0^x\left(F_m(t,T^L(p)(t))-F_m(t,p)\right)\ dt. \tag{6.39}$$

Let us consider the case $1\leq m\leq k$ first. In view of (6.37),

$$F_m(t,T^L(p)(t))-F_m(t,p)\sim\sum_{j,l,\alpha}t^l(t\log t)^j\left(\widetilde{B}_{m,j,l,\alpha}(t,T^L(p)'(t))(tT^L(p)''(t))^\alpha-\widetilde{B}_{m,j,l,|\alpha|}(t,p')(tp'')^\alpha\right)$$

But since $\widetilde{B}_{m,j,l,\alpha}(t,y')(ty'')^\alpha \in C^\infty$, its Taylor series expansion gives that

$$\widetilde{B}_{m,j,l,\alpha}(t,T_L(p)'(t))(tT^L(p)''(t))^\alpha - B_{m,j,l,\alpha}(t,p')(tp'')^\alpha \sim \sum_{r,j,\beta_1,\beta_2} d_{m,j,l,\alpha,r,\beta_1,\beta_2} t^r (T^L_m(p)'(t) - p'_m)^{\beta_1}(tT^L(p)''(t) - tp'')^{\beta_2}.$$

But since (6.36) holds for L, we have that

$$T^L_m(p)'(t) - p'_m \sim \sum_{j=0}^\infty \sum_{r=0}^j t^j (\log t)^r F_{L,m,j,r}(p), \quad 1 \le m \le k,$$

$$tT^L_m(p)''(t) - tp''_m \sim \sum_{j=0}^\infty \sum_{r=0}^j t^j (\log t)^r F_{L,m,j,r}(p), \quad k+1 \le m \le n,$$

and since

$$\left(\sum_{j=0}^\infty \sum_{l=0}^j t^j (\log t)^l A_{j,l}\right)^N \sim \sum_{j=0}^\infty \sum_{l=0}^j t^j (\log t)^l A_{j,l,N}, \tag{6.40}$$

we conclude that

$$T^{L+1}_m(p)(x) - p_m \sim \sum_{j=0}^\infty \sum_{r=0}^j \int_0^x t^j (\log t)^r \widetilde{F}_{m,j,r}(p)\, dt, \quad \widetilde{F}_{m,j,r} \in C^\infty, \tag{6.41}$$

and the result follows from (6.38).

The case of $k+1 \le m \le n$ is similar. Again, we start from (6.39), and observe that the terms in $(x\log x)^j (xy'')^\alpha((\log x)C_{m,j,\alpha}(x,y') + (\log x)^2 D_{m,j,\alpha}(x,y'))$ and $(x\log x)^j(\log x) y_r \widetilde{E}_{r,m,j}(x,y',y'')$ can be handled exactly as above, leading to an expansion of the form (6.36) because of the additional power of $\log x$. We will analyze terms like $\sum_j (x\log x)^j y_r y_s \widetilde{F}_j(x,y',y'')$, $\widetilde{F} \in C^\infty$, and we have to consider the integral

$$\int_0^x (t\log t)^j \left(T_r(p)(t)T_s(p)(t)\widetilde{F}(t,T^L(p)'(t),tT^L(p)''(t)) - p_r p_s \widetilde{F}(t,p',tp'')\right)\, dt \tag{6.42}$$

We write

$$T_r(p)(t)T_s(p)(t)\widetilde{F}(t,T^L(p)'(t),tT^L(p)''(t)) - p_r p_s \widetilde{F}(t,p',tp'') =$$
$$T_r(p)(t)T_s(p)(t)(\widetilde{F}(t,T^L(p)'(t),tT^L(p)''(t)) - \widetilde{F}(t,p',tp''))+$$
$$(T_r(p)(t) - p_r)T_s(p)(t)\widetilde{F}(t,p',tp'') + (T_s(p)(t) - p_s)p_r\widetilde{F}(t,p',tp''),$$

and the same argument used above plus (6.36) gives that

$$T_r(p)(t)T_s(p)(t)\widetilde{F}(t,T^L(p)'(t),tT^L(p)''(t)) - p_r p_s \widetilde{F}(t,p',tp'') \sim \sum_{j=0}^\infty \sum_{l=0}^{j+2} t^j (\log t)^l Y_{j,l,L}(p)$$

As before, we substitute this expression into (6.42) and use (6.38) to show that we gain one power of t and hence the sum goes from $l=0$ to $l=j+1$, and we conclude that (6.36) holds for $L+1$. □

Now we conclude the proof of Theorem 6.1.

Proof. Let Λ be the Lagrangian manifold defined by (6.6), then by definition, $\beta_0^*\Lambda$ is obtained by the joint flow-out of

$$\widetilde{\Lambda}_0 = \beta_0^*(\Lambda) = \beta_0^*\left(\{(z,\zeta,z',\zeta') : z = z',\ \zeta = -\zeta',\ |\zeta|_{g^*(z)} = 1\}\right)$$

under H_{p_R} and H_{p_L}. In other words

$$\beta_0^*\Lambda = \bigcup_{t_1,t_2\geq 0} \exp(t_1 H_{p_L}) \circ \exp(t_2 H_{p_R})\widetilde{\Lambda}_0.$$

On the other hand, also by definition, with $p_{\bullet,\gamma}$ defined in Theorem 6.1, and since by the choice of ρ_R and ρ_L, $\gamma = 0$ near Diag_0,

$$\Lambda^* = \bigcup_{t_1,t_2\geq 0} \exp(t_1 H_{p_{L,\gamma}}) \circ \exp(t_2 H_{p_{R,\gamma}})\widetilde{\Lambda}_0.$$

But since in the interior of $T^*(X \times_0 X)$, the map S_γ defined in (6.14) preserves the symplectic structure, and since $p_{\bullet,\gamma} = S_\gamma^* p_\bullet = p_\bullet \circ S_\gamma$, it follows that $\beta_0^*\Lambda = S_\gamma(\Lambda^*)$, or in other words,

$$(m,\nu) \in \Lambda^* \Leftrightarrow (m, \nu - d\gamma) \in \beta_0^*\Lambda,$$

and so we conclude that

$$\Lambda^* - d\gamma = \beta_0^*\Lambda \text{ in the interior of } T^*(X \times_0 X). \tag{6.43}$$

But, we know that due to the non-trapping assumption Λ is C^∞ in $T^*(\mathring{X} \times \mathring{X})$, and since in the interior of $X \times_0 X$, β_0 is a diffeomorphism and γ is C^∞, it follows that Λ^* is a C^∞ Lagrangian submanifold in the interior of $T^*(X \times_0 X)$. Now we need to establish the regularity of Λ^* up to the left and right faces. First we will show that in the interior,

$$\Lambda^* = \bigcup_{t_1,t_2\geq 0} \exp(t_1 H_{\wp_R}) \circ \exp(t_2 H_{\wp_L})\widetilde{\Lambda}_0. \tag{6.44}$$

Since $p_{\bullet,\gamma}$ vanishes on Λ^*, $\bullet = L, R$, and $\wp_\bullet = \frac{1}{\rho_\bullet} p_{\bullet,\gamma}$, it follows that

$$H_{\wp_\bullet} = \rho_\bullet^{-1} H_{p_{\bullet,\gamma}} + p_{\bullet,\gamma} H_{\rho_\bullet^{-1}},$$

and so we conclude that

$$H_{\wp_\bullet} = \rho_\bullet^{-1} H_{p_{\bullet,\gamma}} \text{ on the set } \{p_{\bullet,\gamma} = 0\},$$

and in particular $H_{\wp_\bullet}$, $\bullet = R, L$, is tangent to Λ^* in the interior of $T^*(X \times_0 X)$. If ω_0 denotes the symplectic form on $T^*(X \times_0 X)$, then

$$\{\wp_R, \wp_L\} = \omega_0(H_{\wp_R}, H_{\wp_L}) = 0 \text{ on } \Lambda^*,$$

and in particular

$$[H_{\wp_R}, H_{\wp_L}] = H_{\{\wp_R,\wp_L\}} = 0 \text{ on } \Lambda^*. \tag{6.45}$$

So Λ^* is also given by (6.44). In view of Lemma 6.2 and Lemma 6.3 the integral curves of $H_{\wp_\bullet}$, $\bullet = R, L$, extend up to $\partial T^*(X \times_0 X)$, and therefore, Λ^* extends up to $\partial T^*(X \times_0 X)$.

Next we verify that (6.18) holds. Since $\Lambda^* \subset \{\wp_R = \wp_L = 0\}$, we deduce from (6.21), (6.23) and (6.26) that in local coordinates (x, y, ξ, η), in which $L = \{x_1 = 0\}$, $R = \{x_2 = 0\}$, then

$$\xi_1 = 0 \text{ on } \Lambda^* \cap \{x_1 = 0\} \text{ and by symmetry } \xi_2 = 0 \text{ on } \Lambda^* \cap \{x_2 = 0\},$$

and therefore the precise asymptotic expansions given in (6.18) follow directly from (6.19) and the asymptotic expansion (6.30) in Lemma 6.3. Moreover, since Λ_0 is a C^∞ compact submanifold, and the vector fields $H_{\wp_\bullet}$ are non-degenerate at $\{\rho_\bullet = 0\}$, $\bullet = R, L$, the extension of Λ^* up to $\partial T^*(X \times_0 X)$ is a compact submanifold of $T^*(X \times_0 X)$.

Finally we need to show that $\Lambda^* \cap \{\rho_\bullet = 0\}$ is a Lagrangian submanifold of $T^*\{\rho_\bullet = 0\}$ and $\Lambda^* \cap \{\rho_R = \rho_L = 0\}$ is a Lagrangian submanifold of $T^*\{\rho_R = \rho_L = 0\}$. Let $x = (x_1, x_2, x_3, x')$ in $\mathbb{R}^{2n+2}$ be local coordinates valid near $\mathrm{ff} \cap L \cap R$ such that

$$\mathrm{ff} = \{x_3 = 0\},\ L = \{x_1 = 0\} \text{ and } R = \{x_2 = 0\}. \tag{6.46}$$

and that the symplectic form $\omega^0 = d\xi \wedge dx$. We know that Λ^* is a Lagrangian submanifold of $T^*\{x_1 > 0,\ x_2 > 0,\ x_3 > 0\}$ up to the front face $\mathrm{ff} = \{x_3 = 0\}$ and intersects ff transversally. The fields $H_{\wp_R}$ and

$H_{\wp_L}$ are tangent to Λ^* that are C^∞ up to $\{x_3 = 0\}$, and satisfy (6.45), and (6.19) holds for $H_{\wp_\bullet}$. Moreover, $H_{\wp_R}$ is tangent to ff and L, while $H_{\wp_L}$ is tangent to ff and R.

Let

$$\mathcal{F} = T^*_{\{x_1=x_2=0\}}(\{x : x_1 \geq 0, x_2 \geq 0, x_3 \geq 0\}), \tag{6.47}$$

and let $p = (0, 0, x_3, \xi_3, x', \xi'))$, denote a point on $\mathcal{F} \cap \Lambda^*$. So, for ε small enough we define

$$\Psi_0 : [0, \varepsilon) \times [0, \varepsilon) \times (\mathcal{F} \cap \Lambda^*) \longrightarrow U_0 \subset T^*(\{x_1 \geq 0, x_2 \geq 0, x_3 \geq 0\})$$
$$\Psi_0(t_1, t_2, p) = \exp(-t_1 H_{\wp_R}) \circ \exp(-t_2 H_{\wp_L})(p),$$

Notice that we are defining this map restricted to Λ^*, since $H_{\wp_\bullet}$ is tangent to Λ^* and the initial set is contained in Λ^*. Since the vector fields $H_{\wp_R}$, $H_{\wp_L}$ commute on Λ^*, Ψ_0 is well defined and moreover,

$$\Psi_0^*(H_{\wp_L}|_{\Lambda^*}) = -\partial_{t_1}, \quad \Psi_0^*(H_{\wp_R}|_{\Lambda^*}) = -\partial_{t_2}.$$

Similarly, let

$$\Psi_1 : [0, \varepsilon) \times [0, \varepsilon) \times (\mathcal{F} \cap \Lambda^*) \longrightarrow U_1 \subset T^*(\{x_1 \geq 0, x_2 \geq 0, x_3 \geq 0\})$$
$$\Psi_1(t_1, t_2, p) = \exp(-t_1 \partial_{x_1}) \circ \exp(-t_2 \partial_{x_2})(p),$$

and we also have

$$\Psi_1^* \partial_{x_1} = -\partial_{t_1}, \quad \Psi_1^* \partial_{x_2} = -\partial_{t_2}.$$

Hence,

$$\begin{gathered} \Psi = \Psi_0 \circ \Psi_1^{-1} : U_1 \longrightarrow U_0, \\ \Psi^* H_{\wp_L} = \partial_{x_1}, \quad \Psi^* H_{\wp_R} = \partial_{x_2} \text{ and } \Psi|_{\mathcal{F}} = \mathrm{Id}. \end{gathered} \tag{6.48}$$

So $\Upsilon = \Psi^* \Lambda^*$ is a Lagrangian submanifold of $T^*\{x : x_1 \geq 0, x_2 \geq 0, x_3 \geq 0\})$, and $\Psi^* H_{\wp_L}|_\Upsilon = H_{\xi_1} = \partial_{x_1}$ and $\Psi^* H_{\wp_R}|_\Upsilon = H_{\xi_2} = \partial_{x_2}$. Therefore when restricted to Υ, $\Psi^* \wp_L = \xi_1 + C_1$ and $\Psi^* \wp_R = \xi_2 + C_2$. But since $\Psi = \mathrm{Id}$ of $\mathcal{F}$ and as observed above since $\wp_R(p) = \wp_L(p) = 0$, implies that $\xi_1(p) = \xi_2(p) = 0$, it follows that $C_1 = C_2 = 0$. So $\xi_1 = \xi_2 = 0$ on Υ and this implies that Υ is foliated by submanifolds

$$\Upsilon_a = \Upsilon \cap \{x_1 = a\}, \quad \Upsilon^a = \Upsilon \cap \{x_2 = a\},$$

and Υ_a is a Lagrangian submanifold of $T^*\{x_1 = a\}$, because $\xi_1 = 0$ on Υ, and similarly Υ^a is a Lagrangian submanifold of $T^*\{x_2 = a\}$. In particular this shows that

$$(\Psi^{-1})^*(\Upsilon \cap \{x_1 = 0\}) = \Lambda^* \cap \{\rho_L = 0\} \text{ is a Lagrangian submanifold of } T^*\{\rho_L = 0\},$$
$$(\Psi^{-1})^*(\Upsilon \cap \{x_2 = 0\}) = \Lambda^* \cap \{\rho_R = 0\} \text{ is a Lagrangian submanifold of } T^*\{\rho_R = 0\}.$$

The same argument shows that

$$\Upsilon \cap \{x_1 = x_2 = a\} \text{ is a Lagrangian submanifold of } T^*\{x_1 = x_2 = a\},$$

and this implies that $\Lambda^* \cap \{\rho_R = \rho_L = 0\}$ is a Lagrangian submanifold of $T^*\{\rho_R = \rho_L = 0\}$. This concludes the proof of Theorem 6.1. □

As an application of Theorem 6.1, we study the asymptotics of the distance function $r(z, z')$ between $z, z' \in \mathring{X}$ as $z, z' \to \partial X$, in the case where $(\mathring{X}, g)$ is a geodesically convex CCM. In this case there are no conjugate points along any geodesic in $\mathring{X}$ and $r(z, z')$ is equal to the length of the unique geodesic joining the two points. Moreover, $r(z, z')$ is smooth on $(\mathring{X} \times \mathring{X}) \setminus \mathrm{Diag}$. This is the case when $(\mathring{X}, g)$ is a Cartan-Hadamard manifold, i.e. when $\mathring{X}$ has non-positive sectional curvature, see [19]. The following is a consequence of Theorem 6.1

Theorem 6.4. *Let $(\mathring{X}, g)$ be a geodesically convex CCM, and let ρ_L and ρ_R be boundary defining functions of L and R respectively. For $z, z' \in \mathring{X}$, the lift of the distance function $r(z, z')$ to $X \times_0 X$ satisfies*

$$\beta_0^* r = -\gamma + \mathcal{R}, \quad \gamma = \frac{1}{\kappa_L} \log \rho_L + \frac{1}{\kappa_R} \log \rho_R \tag{6.49}$$

$\mathcal{R}$ is C^∞ up to $\partial(X \times_0 X)$ if κ is constant, and in general $d_m\mathcal{R}$ has polyhomogeneous expansion at $\{\rho_R = 0\} \cup \{\rho_L = 0\}$. More precisely if (x_1, x_2, x'), are local coordinates near $\{x_1 = x_2 = 0\}$, where $x_1 = \rho_L$, $x_2 = \rho_R$,

$$\mathcal{R}(x_1, x_2, x') - \mathcal{R}(0, 0, x') \sim \sum_{j_1=2, j_2=2}^{\infty} \sum_{k_1=0}^{j_1} \sum_{k_2=0}^{j_2} x_1^{j_1} (\log x_1)^{k_1} x_2^{j_2} (\log x_2)^{k_2} \mathcal{W}_{j_1,k_1,j_2,k_2}(x'). \tag{6.50}$$

Notice that the expansion begins with x_j^2, and therefore $\mathcal{R}$ is of class C^1.

Proof. Since $(\mathring{X}, g)$ is geodesically convex, $\Lambda \setminus \Lambda_0$ is the graph of the differential of the distance function. In other words,

$$\Lambda \setminus \Lambda_0 = \{(z, \zeta, z', \zeta') : \zeta' = d_{z'} r(z, z'),\ \zeta = d_z r(z, z'),\ \text{provided } (z, \zeta) \neq (z', -\zeta')\}. \tag{6.51}$$

It then follows that $\beta_0^* \Lambda = \{(m, d_m \beta_0^* r)\}$, but according to (6.43), $\beta_0^* \Lambda + d\gamma = \Lambda^*$, and so

$$\Lambda^* = \{(m, d_m \mathcal{R})\}, \quad \mathcal{R} = \gamma + \beta_0^* r \tag{6.52}$$

But in view of (6.18) and in coordinates (x_1, x_2, x'), near $\{x_1 = x_2 = 0\}$, where $x_1 = \rho_L$, $x_2 = \rho_R$,

$$\partial_{x_r} \mathcal{R} \sim \sum_{j_1, j_2=1}^{\infty} \sum_{k_1=0}^{j_1+1} \sum_{k_2=0}^{j_2+1} x_1^{j_1} (\log x_1)^{k_1} x_2^{j_2} (\log x_2)^{k_2} \mathcal{R}_{r,j_1,k_1,j_2,k_2}(x'),\ r = 1, 2. \tag{6.53}$$

But we know that Λ^* extends to $\{\rho_R = 0\} \cap \{\rho_L = 0\}$, and is C^∞ there, so $\mathcal{R}(0, 0, x')$ is C^∞. Integrating the equation for $\partial_{x_1}\mathcal{R}$ restricted to $\{x_2 = 0\}$, and integrating $\partial_{x_1}\mathcal{R}$ restricted to $\{x_2 = 0\}$, and similarly integrating $\partial_{x_2}\mathcal{R}$ restricted to $\{x_1 = 0\}$ we find that

$$\begin{aligned} \mathcal{R}(x_1, 0, x') - \mathcal{R}(0, 0, x') &\sim \sum_{j_1=2}^{\infty} \sum_{k_1=0}^{j_1} x_1^{j_1} (\log x_1)^{k_1} \mathcal{E}_{1,j_1,k_1}(x'), \\ \mathcal{R}(0, x_2, x') - \mathcal{R}(0, 0, x') &\sim \sum_{j_2=2}^{\infty} \sum_{k_2=0}^{j_2} x_2^{j_2} (\log x_2)^{k_2} \mathcal{E}_{2,j_2,k_2}(x'), \end{aligned} \tag{6.54}$$

Now integrating the equations in (6.53) for $\partial_{x_1}\mathcal{R}$ and $\partial_{x_2}\mathcal{R}$, we obtain

$$\mathcal{R}(x_1, x_2, x') - \mathcal{R}(x_1, 0, x') \sim \sum_{j_1=1, j_2=2}^{\infty} \sum_{k_1=0}^{j_1+1} \sum_{k_2=0}^{j_2} x_1^{j_1} (\log x_1)^{k_1} x_2^{j_2} (\log x_2)^{k_2} \mathcal{V}_{j_1,k_1,j_2,k_2}(x'),$$

$$\mathcal{R}(x_1, x_2, x') - \mathcal{R}(0, x_2, x') \sim \sum_{j_1=2, j_2=1}^{\infty} \sum_{k_1=0}^{j_1} \sum_{k_2=0}^{j_2+1} x_1^{j_1} (\log x_1)^{k_1} x_2^{j_2} (\log x_2)^{k_2} \mathcal{W}_{j_1,k_1,j_2,k_2}(x'),$$

and using (6.54) we obtain

$$\mathcal{R}(x_1,x_2,x')-\mathcal{R}(0,0,x')\sim\sum_{j_1=2}^{\infty}\sum_{k_1=0}^{j_1}x_1^{j_1}(\log x_1)^{k_1}\mathcal{E}_{1,j_1,k_1}(x')+$$
$$\sum_{j_1=1,j_2=2}^{\infty}\sum_{k_1=0}^{j_1+1}\sum_{k_2=0}^{j_2}x_1^{j_1}(\log x_1)^{k_1}x_2^{j_2}(\log x_2)^{k_2}\mathcal{V}_{j_1,k_1,j_2,k_2}(x'),$$

and

$$\mathcal{R}(x_1,x_2,x')-\mathcal{R}(0,0,x')\sim\sum_{j_2=2}^{\infty}\sum_{k_2=0}^{j_2}x_2^{j_2}(\log x_2)^{k_2}\mathcal{E}_{2,j_1,k_1}(x')+$$
$$\sum_{j_1=2,j_2=1}^{\infty}\sum_{k_1=0}^{j_1}\sum_{k_2=0}^{j_2+1}x_1^{j_1}(\log x_1)^{k_1}x_2^{j_2}(\log x_2)^{k_2}\mathcal{W}_{j_1,k_1,j_2,k_2}(x').$$

Therefore we conclude that the terms in $j_1=1$ and the terms with $k_1=j_1+1$ in the first equation are equal to zero, and similarly, the terms in $j_2=1$ and the ones with $k_2=j_2+1$ in the second equation are also equal to zero. So we conclude that (6.50) holds and this proves the Theorem. □

Equation (6.49) was the key ingredient in the construction of a semiclassical parametrix for the resolvent of the Laplacian carried out in [52] when $\mathring{X}=\{z\in\mathbb{R}^{n+1}:|z|<1\}$ is equipped with a metric

$$g_\varepsilon=\frac{4dz^2}{(1-|z|^2)^2}+\chi(\frac{1-|z|^2}{\varepsilon})H(z,dz), \tag{6.55}$$

where $\chi(t)\in C_0^\infty(\mathbb{R})$, with $\chi(t)=1$ if $|t|<1$ and $\chi(t)=0$ if $|t|>2$, H is a C^∞ symmetric 2-tensor. Melrose, Sá Barreto and Vasy in [52] showed that there exists $\varepsilon_0>0$ such that (6.49) holds for $(\mathring{X},g_\varepsilon)$. Metrics of the type (6.55) appear in connection with the analysis of the asymptotic behavior of solutions of the wave equation on de Sitter-Schwarzschild space-time, [53].

The key property in the theory of Fourier integral operators is that Lagrangian submanifolds can be locally parametrized by phase functions, and Lagrangian distributions are locally given by oscillatory integrals with phases that parametrize the Lagrangian. In the case of geodesically convex CCM, (6.52) gives that Λ^* is given by the graph of the differential of $\mathcal{R}$. This is possible because the canonical projection $\Pi: T^*(X\times_0 X)\longmapsto X\times_0 X$ when restricted to Λ^* is a diffeomorphism. In general this is not possible, but one can still find something similar.

Let M be a C^∞ manifold of dimension d, let T^*M denote its cotangent bundle and let ω denote the canonical 2-form on T^*M. Let Ω be a local chart for M (which we identify with an open subset of $\mathbb{R}^d$) and let $U\subset\Omega\times\mathbb{R}^N$, $N\in\mathbb{N}_0$, be an open subset. A function $\Phi(y,\theta)\in C^\infty(U;\mathbb{R})$ is a non-degenerate phase function if

$$\begin{gathered}|d_{y,\theta}\Phi(y,\theta)|\geq C(1+|\theta|)^\rho,\ \text{for some } \rho>0 \text{ and all } (y,\theta)\in U\\ \text{and if } d_\theta\Phi(y,\theta)=0 \text{ for some } (y,\theta)\in U,\ \text{then}\\ d_{y,\theta}(\frac{\partial\Phi(y,\theta)}{\partial\theta_j}),\ \text{are linearly independent for } j=1,2,\dots N.\end{gathered} \tag{6.56}$$

If these conditions are satisfied,

$$C_\Phi=\{(y,\theta)\in U:\ d_\theta\Phi(y,\theta)=0\}$$

is a C^∞ submanifold of U of dimension d and the map

$$\begin{gathered}T_\Phi: C_\Phi\longrightarrow T^*\Omega\\ (y,\theta)\longmapsto(y,d_y\Phi(y,\theta))\end{gathered}$$

is an immersion, and

$$\Lambda_\Phi = \{(y, d_y\Phi(y,\theta)) : \ (y,\theta) \in C_\Phi\}$$

is an immersed Lagrangian submanifold of $T^*\Omega$. Moreover, any d-dimensional C^∞ submanifold $\Lambda \subset T^*M$ is Lagrangian if and only if for every $(y_0, \eta_0) \in \Lambda$ there is a local chart Ω near y_0 such that $\Lambda \cap T^*\Omega = \Lambda_\Phi$ for some non-degenerate phase function Φ. Notice that if $N = 0$, then $\Lambda = \{(y, d_y\Phi(y))\}$, and therefore, if $\Pi : T^*\Omega \longrightarrow \Omega$ is the canonical projector, then $\Pi|_\Lambda : \Lambda \longrightarrow \Omega$ is a diffeomorphism. The converse is also true, if $\Lambda \subset T^*M$ is Lagrangian submanifold and if $\Pi|_\Lambda : \Lambda \longrightarrow M$ is a diffeomorphism near (y_0, η_0), then there exists a neighborhood $\Omega \ni y_0$ and a function $\Phi \in C^\infty(\Omega)$ such that $\Lambda \cap T^*\Omega = \{(y, d_y\Phi)\}$. In general this is not possible, and one needs the θ-variables to parametrize Λ. In fact one can always choose a special phase function. We know, see for example Section 4.1 of [3], that if $\Lambda \subset T^*M$ is a Lagrangian submanifold, and $(y_0, \eta_0) \in \Lambda$, there exist local coordinates $y = (y', y'')$, $y' = (y_1, \dots, y_k)$, in a neighborhood of y_0 and corresponding dual coordinates (η', η'') and C^∞ maps

$$\begin{gathered} S' : \mathbb{R}^{n-k}_{y''} \times \mathbb{R}^k_{\eta'} \longrightarrow \mathbb{R}^k, \\ (y'', \eta') \longmapsto (S'_1(y'', \eta'), \dots, S'_k(y'', \eta')) \\ \text{and } S'' : \mathbb{R}^{n-k}_{y''} \times \mathbb{R}^k_{\eta'} \longrightarrow \mathbb{R}^{n-k}, \\ (y'', \eta') \longmapsto (S''_{k+1}(y'', \eta'), \dots, S''_n(y'', \eta')), \end{gathered}$$

such that

$$\Lambda = \{(y, \eta) : \ y' = S'(y'', \eta'), \ \ \eta'' = S''(y'', \eta')\}. \tag{6.57}$$

In fact, since the canonical form $\omega = d\eta \wedge dy = 0$ on Λ, it follows that there exists $\tilde{S}(y', \eta'')$ such that

$$\begin{gathered} S'_j(y'', \eta') = \partial_{\eta'_j}\tilde{S}(y'', \eta'), \ \ 1 \le j \le k, \\ S''_j(y'', \eta') = -\partial_{y''_j}\tilde{S}(y'', \eta'), \ \ k+1 \le j \le n. \end{gathered}$$

If we set $\theta = \eta'$, this implies that

$$\Lambda = \{(y, d_y\Phi(y', \eta')) : d_{\eta'}\Phi(y, \eta') = 0\} \text{ where } \Phi(y', \eta') = \langle y', \eta'\rangle - \widetilde{S}(y'', \eta'). \tag{6.58}$$

Recall that $X \times_0 X$ is a C^∞ manifold with corners, but the product structure (2.2) valid in a tubular neighborhood of ∂X gives a way of doubling X and extending the metric $x^2 g$, where x is the boundary defining function in (2.2), across ∂X. Similarly, the lift of the product structure (2.2) from $X \times X$ to $X \times_0 X$ gives a way of doubling $X \times_0 X$ and extending the lift of the metric from either factor of $X \times X$ across $\partial(X \times_0 X)$ as well. So we may think of $X \times_0 X$ as a submanifold with corners of a C^∞ manifold. In the case of asymptotic constant sectional curvature, the manifold Λ^* is a C^∞ Lagrangian manifold that can be smoothly extended across the boundary $\partial T^*(X \times_0 X)$ and therefore, for any $p \in \Lambda^*$ including points on the boundary, there exist neighborhood Γ of p such that $\Lambda^* \cap \Gamma = \Lambda_\Phi$ for a non-degenerate phase function $\Phi(m, \theta)$.

When κ is not constant, the manifold Λ^* has polyhomogeneous singularities at the right and left faces of $T^*(X \times_0 X)$, so we need to show that Λ^* can locally be parametrized by a phase function which has polyhomogeneous singularities at the right and left faces of $T^*(X \times_0 X)$, but it is C^∞ in the θ variables. Here we need all the properties of Λ^* established in Theorem 6.1:

Theorem 6.5. *Let $(\mathring{X}, g)$ be a non-trapping CCM and let Λ^* be the manifold defined in Theorem 6.1. If $\upsilon \in T^*_\bullet(X \times_0 X) \cap \Lambda^*$, $\bullet = L, R$, or $\upsilon \in T^*_{L\cap R}(X \times_0 X) \cap \Lambda^*$ and $\Pi : T^*(X \times_0 X) \longrightarrow X \times_0 X$ is the canonical projector, then there exists an (relatively) open chart $\Omega \ni \Pi(\upsilon)$ and a phase function $\Phi(m, \theta)$ with $(m, \theta) \in U \subset \Omega \times \mathbb{R}^N$, open and $N \in \mathbb{N}_0$, such that $\Phi(m, \theta)$ is C^∞ in the interior of U, is C^∞ up to the front face* ff, *and has polyhomogeneous expansions at L and R in the sense that if $x = (x_1, x_2, y)$ where*

$L = \{x_1 = 0\}$, $R = \{x_2 = 0\}$

$$\Phi(x_1, x_2, y, \theta) = \Phi(0, 0, y, \theta) + \sum_{j_1=2, j_2=2}^{\infty} \sum_{k_1=0}^{j_1} \sum_{k_2=0}^{j_2} x_1^{j_1} x_2^{j_2} (\log x_1)^{k_1} (\log x_2)^{k_2} \Phi_{j_1,j_2,k_1,k_2}(y, \theta), \tag{6.59}$$

$\Phi(0, 0, y, \theta)$, $\Phi_{j_1,j_2,k_1,k_2}(y, \theta) \in C^\infty$, *and*

$$\Lambda^* \cap T^*\mathring{\Omega} = \{(m, d_m\Phi) : d_\theta\Phi = 0\},$$

and up to the boundary of Ω.

Notice that, as in the case of $\mathcal{R}$ in Theorem 6.4, the expansion begins with x_j^2, and therefore Φ is of class C^1. This fact will be very important in the construction of the parametrix.

Proof. Let us assume that υ lies in a codimension 2 corner and we will carry out the proof uniformly up to the front face. The proofs in the other case follow the same argument. Let (x_1, x_2, y) $y \in \mathbb{R}^{2n}$ be local coordinates near $\Pi(\upsilon)$ such that

$$L = \{x_1 = 0\} \text{ and } R = \{x_2 = 0\}.$$

We shall assume that $x_1(\upsilon) = x_2(\upsilon) = 0$, so the projection of υ to the base, that we shall denote by $\Pi(\upsilon)$, lies in the intersection of the right and left faces. We know from Lemma 6.3, that

$$\Lambda^* \cap \{x_1 = x_2 = 0\} = \Lambda^*_\partial$$

is a C^∞ Lagrangian in $T^*\{x_1 = x_2 = 0\}$ which can be thought as a submanifold of $T^*\mathbb{R}^{2n+2}$ given by

$$T^*\{x_1 = x_2 = 0\} = \{(x_1, x_2, y, \xi_1, \xi_2, \eta) : x_1 = x_2 = \xi_1 = \xi_2 = 0\}. \tag{6.60}$$

In view of Lemma 6.2, in these coordinates, $H_{\wp_\bullet}$, $\bullet = R, L$ is given by (6.19). Then pick coordinates (y, η) valid in a neighborhood $\upsilon \in U_\partial \subset T^*\mathbb{R}^{2n}$ such that (6.58) holds for Λ^*_∂. We can extend (y, η) to coordinates $(\widetilde{y}, \widetilde{\eta})$ valid in an open set $U \subset T^*(X \times_0 X)$ by $(\widetilde{y}, \widetilde{\eta}) = \exp(-t_1 H_{\wp_R}) \circ \exp(-t_2 H_{\wp_L})(y, \eta)$, starting from $U \cap \{x_1 = x_2 = 0\} = U_\partial$. It follows from (6.18) that

$$\begin{aligned}
\widetilde{y} &= y + F(x_1, x_2, y, \eta), \quad F(0, 0, y, \eta) = 0,\\
\widetilde{\eta} &= \eta + G(x_1, x_2, y, \eta), \quad G(0, 0, y, \eta) = 0,\\
\xi_1 &= W_1(x_1, x_2, y, \eta), \quad W_1(0, 0, y, \eta) = 0\\
\xi_2 &= W_2(x_1, x_2, y, \eta), \quad W_2(0, 0, y, \eta) = 0,
\end{aligned}$$

where F, G, W_1 and W_2 have polyhomogeneous expansions at R and L. One should notice that the curves start on Λ^*_∂, and so they remain on Λ^*, and on Λ^*, $[H_{\wp_R}, H_{\wp_L}] = 0$. Therefore, on Λ^*, $\exp(-t_1 H_{\wp_R}) \circ \exp(-t_2 H_{\wp_L})(y, \eta) = \exp(-t_2 H_{\wp_L}) \circ \exp(-t_1 H_{\wp_R})(y, \eta)$. However, in view of (6.58), we in fact have that on Λ^*,

$$\begin{aligned}
\widetilde{y} &= y + \widetilde{F}(x_1, x_2, y'', \eta'), \quad \widetilde{F}(0, 0, y'', \eta') = 0,\\
\widetilde{\eta} &= \eta + \widetilde{G}(x_1, x_2, y'', \eta'), \quad \widetilde{G}(0, 0, y'', \eta') = 0,\\
\xi_1 &= \widetilde{W}_1(x_1, x_2, y'', \eta'), \quad \widetilde{W}_1(0, 0, y'', \eta') = 0,\\
\xi_2 &= \widetilde{W}_2(x_1, x_2, y'', \eta'), \quad \widetilde{W}_2(0, 0, y'', \eta') = 0,
\end{aligned}$$

with $\widetilde{F}$, $\widetilde{G}$, $\widetilde{W}_1$ and $\widetilde{W}_2$ polyhomogeneous in (x_1, x_2), and this implies that on Λ^*,

$$\begin{aligned}
\widetilde{y}' &= \widetilde{H}_1(x_1, x_2, \widetilde{y}'', \widetilde{\eta}'), \quad \widetilde{\eta}'' = \widetilde{H}_2(x_1, x_2, \widetilde{y}'', \widetilde{\eta}'),\\
\xi_1 &= X_1(x_1, x_2, \widetilde{y}'', \widetilde{\eta}'), \quad \xi_2 = X_2(x_1, x_2, \widetilde{y}'', \widetilde{\eta}'),
\end{aligned} \tag{6.61}$$

again with $\widetilde{H}_j$ and X_j, $j = 1, 2$ polyhomogeneous in (x_1, x_2). This would follow from the inverse function theorem if the functions were C^∞, but in this case we need the following

Lemma 6.6. *Let $F(x_1,x_2,Y)\in C^\infty((0,\varepsilon)\times(0,\varepsilon);C^\infty(U))\cap C([0,\varepsilon)\times[0,\varepsilon);C^\infty(U))$ where U is a neighborhood of $0\in\mathbb{R}^n$. Suppose that*

$$F(x_1,x_2,Y)\sim\sum_{j_1,j_2=1}^{\infty}\sum_{k_1=0}^{j_1}\sum_{k_2=0}^{j_2}x_1^{j_1}(\log x_1)^{k_1}x_2^{j_2}(\log x_1)^{k_2}F_{j_1,j_2,k_1,k_2}(Y),\quad F_{j_1,j_2,k_1,k_2}\in C^\infty(U).$$

If $\widetilde{Y}=Y+F(x_1,x_2,Y)$, then there exist $\delta>0$, an open subset V with $0\in\overline{V}\subset U$ and a function $\widetilde{F}\in C([0,\delta)\times[0,\delta);C^\infty(V))$, such that

$$Y=\widetilde{Y}+\widetilde{F}(x_1,x_2,\widetilde{Y}),\ \textit{and}$$

$$\widetilde{F}(x_1,x_2,Y)\sim\sum_{j_1,j_2=1}^{\infty}\sum_{k_1=0}^{j_1}\sum_{k_2=0}^{j_2}x_1^{j_1}(\log x_1)^{k_1}x_2^{j_2}(\log x_1)^{k_2}\widetilde{F}_{j_1,j_2,k_1,k_2}(Y),\quad \widetilde{F}_{j_1,j_2,k_1,k_2}\in C^\infty(V). \tag{6.62}$$

Proof. For $\varepsilon>0$, we let $B_\varepsilon=\{Y\in\mathbb{R}^n:|Y|\le\varepsilon\}\Subset U$ and pick $\delta>0$ such that

$$\sup_{x_1,x_2\in[0,\delta],\ Y\in B_\varepsilon}|F(x_1,x_2,Y)|<\frac{\varepsilon}{2},\quad \sup_{x_1,x_2\in[0,\delta],\ Y\in B_\varepsilon}|\partial_{Y_j}F(x_1,x_2,Y)|<\frac{1}{2}. \tag{6.63}$$

On this set,

$$|(Y_1+F(x_1,x_2,Y_1))-(Y_2+F(x_1,x_2,Y_2))|\ge|Y_1-Y_2|-|F(x_1,x_2,Y_1)-F(x_1,x_2,Y_2)|\ge\frac{1}{2}|Y_1-Y_2|,$$

so the map is injective and hence it has an inverse defined on its range.

Next we define the map

$$TZ=\widetilde{Y}-F(x_1,x_2,Z),\quad |Z|\le\varepsilon,$$

and the norm

$$||\Psi||=\sup_{[0,\delta]\times[0,\delta]\times B_{\varepsilon/2}}|\Psi(x_1,x_1,\widetilde{Y})|,\quad \Psi\in C([0,\delta]\times[0,\delta]\times B_{\varepsilon/2}).$$

Let

$$\mathcal{B}_{\delta,\varepsilon}=\{\Psi\in C([0,\delta]\times[0,\delta]\times B_{\varepsilon/2}):\ ||\Psi||\le\varepsilon\}.$$

Then in view of (6.63), provided $|\widetilde{Y}|\le\frac{\varepsilon}{2}$,

$$T:\mathcal{B}_{\delta,\varepsilon}\longrightarrow\mathcal{B}_{\delta,\varepsilon},$$

and moreover, if $\Psi_j(x_1,x_2,\widetilde{Y})\in\mathcal{B}_{\delta,\varepsilon}$ $j=1,2$,

$$||T\Psi_1-T\Psi_2||=||F(x_1,x_2,\Psi_1)-F(x_1,x_2,\Psi_2)||\le\frac{1}{2}||\Psi_1-\Psi_2||.$$

Therefore T is a contraction, and hence it has a unique fixed point, and to find this fixed point we just define the sequence $Y_0=\widetilde{Y}$ and $Y_n=TY_{n-1}$. Then $||Y_{n+1}-Y_n||\le(\frac{1}{2})^n||Y_1-Y_0||$ and hence for any $n,k\in\mathbb{N}$,

$$||Y_{n+k}-Y_n||\le\sum_{j=1}^{k}||Y_{n+j}-Y_{n+j-1}||\le||Y_1-Y_0||\sum_{j=1}^{k}(\frac{1}{2})^{n+j-1}\le(\frac{1}{2})^{n-1}||Y_1-Y_0||.$$

Therefore $Y_n(x_1,x_2,\widetilde{Y})$ is a Cauchy sequence in $C([0,\delta]\times[0,\delta]\times B_{\varepsilon/2})$ and hence it converges uniformly to $Y(x_1,x_2,\widetilde{Y})=\lim_{n\to\infty}Y_n(x_1,x_2,\widetilde{Y})$, then there exists $\widetilde{F}(x_1,x_2,\widetilde{Y})$ such that $Y(x_1,x_2,\widetilde{Y})$ satisfies

$$\begin{aligned}Y(x_1,x_2,\widetilde{Y})&=\widetilde{Y}+\widetilde{F}(x_1,x_2,\widetilde{Y}),\ \text{and}\\ Y(x_1,x_2,\widetilde{Y})&=\widetilde{Y}-F(x_1,x_2,Y(x_1,x_2,\widetilde{Y})).\end{aligned} \tag{6.64}$$

Now we have to show that this function satisfies the expansion (6.62), but this follows by iteration in (6.64), the expansion of F and the Taylor expansion of the coefficients $F_{j_1,j_2,k_1,k_2}(Y)$. □

It also follows from the definition of the coordinates $(\widetilde{y},\widetilde{\eta})$ that Λ^* is a Lagrangian submanifold with respect to $\omega = d\xi_1\wedge dx_1 + dx_2\wedge d\xi_2 + d\widetilde{\eta}\wedge d\widetilde{y}$. Then (6.61) implies that there exist $\widetilde{S}(x_1,x_2,\widetilde{y}'',\widetilde{\eta}')$ with polyhomogeneous expansion in (x_1,x_2) such that

$$\widetilde{y}' = \partial_{\widetilde{\eta}'}\widetilde{S},\ \ \eta'' = -\partial_{\widetilde{y}''}\widetilde{S},$$
$$\xi_1 = -\partial_{x_1}\widetilde{S},\ \ \xi_2 = -\partial_{x_2}\widetilde{S}.$$

Therefore, setting $\theta = \widetilde{\eta}'$, in the interior, $\Lambda^* = \Lambda_{\tilde{\Phi}}$, where

$$\tilde{\Phi}(x_1,x_2,y,\widetilde{\eta}') = \langle \widetilde{y}',\widetilde{\eta}'\rangle - \widetilde{S}(x_1,x_2,\widetilde{y}'',\widetilde{\eta}').$$

We are left to prove (6.59), but this follows from (6.18), and the same argument used in the proof of (6.50), as in Theorem 6.4. □

Notice that expansion (6.59) guarantees that the definition of non-degeneracy can be applied in the case of such phase functions.

The following is a consequence of Theorem 6.5 and (6.43)

Corollary 6.7. *Let $(\mathring{X},g)$ be a non-trapping CCM, let $\Lambda\subset T^*(\mathring{X}\times\mathring{X})$ be the Lagrangian manifold defined in* (6.6) *and let Λ^* be the manifold defined in Theorem 6.1. If $\Phi(m,\theta)$ is a polyhomogeneous phase function that locally parametrizes Λ^* in the interior of $T^*(X\times_0 X)$, and γ is the function defined in* (3.9)*, then $\Psi(m,\theta) = \Phi(m,\theta) - \gamma$ locally parametrizes $\beta_0^*\Lambda$ in the interior of $T^*(X\times_0 X)$.*

Notice that a phase function that parametrizes Λ^* is only determined modulo a constant. In the case a conic Lagrangian Λ, a phase function $\Phi(z,\theta)$ that parametrizes Λ is homogeneous in θ, and Euler's equation shows that $\Phi(z,\theta) = \theta\cdot d_\theta\Phi$, and hence $\Phi = 0$ on the set $\{d_\theta\Phi = 0\}$. However, in our case Λ^* is not homogeneous, and the dependence on the value of the phase function restricted to its critical points will generate difficulties when defining the principal symbol of semiclassical Lagrangian distributions associated to Λ^*, and we need to find more specific phase functions that parametrize Λ^*.

6.1. **The construction via the wave equation.** It will also be useful to present a construction of Λ and Λ^* from the wave equation, so we work on the manifold $T^*(\mathbb{R}_t\times\mathring{X}\times\mathring{X})$, which can be identified with the product $T^*\mathbb{R}_t\times T^*\mathring{X}\times T^*\mathring{X}$. In local coordinates $(t,\tau,z,\zeta,z',\zeta')$ the canonical 2-form on $T^*(\mathbb{R}\times\mathring{X}\times\mathring{X})$ is given by

$$\tilde{\omega} = d\tau\wedge dt + \sum_{j=1}^{n+1} d\zeta_j\wedge dz_j + \sum_{j=1}^{n+1} d\zeta_j'\wedge dz_j'.$$

We define the principal symbol of half of the negative wave operator, $-\frac{1}{2}\Box = \frac{1}{2}(\Delta_g - D_t^2)$, to be $Q = \frac{1}{2}(|\zeta|^2_{g^*(z)} - \tau^2)$ and its characteristic variety is $\mathcal{N}_Q = \{Q=0\}$. In local coordinates, the Hamilton vector field of Q is given by

$$H_Q = -\tau\frac{\partial}{\partial t} + \frac{1}{2}\sum_{j=1}^{n+1}\frac{\partial|\zeta|^2_{g^*(z)}}{\partial\zeta_j}\frac{\partial}{\partial z_j} - \frac{\partial|\zeta|^2_{g^*(z)}}{\partial z_j}\frac{\partial}{\partial\zeta_j}, \tag{6.65}$$

and define the twisted bicharacteristic relation for Q

$$\begin{aligned}\widetilde{\Lambda} = \{(t,\tau,z,\zeta,z',-\zeta')\in T^*(\mathbb{R}\times\mathring{X}\times\mathring{X})\setminus 0:\ (t,\tau,z,\zeta)\in\mathcal{N}_Q,\ \ (0,\tau,z',-\zeta')\in\mathcal{N}_Q,\\ \text{lie on the same integral curve of } H_Q\}.\end{aligned} \tag{6.66}$$

Again, in view of the non-trapping assumption, $\widetilde{\Lambda}$ is a C^∞, conic, closed Lagrangian submanifold in $T^*(\mathbb{R}\times\mathring{X}\times\mathbb{R}\times\mathring{X})\setminus 0$. Since $\mathcal{N}_Q\setminus 0$ consists of two disjoint components

$$\mathcal{N}_Q = \mathcal{N}_{Q,+}\cup\mathcal{N}_{Q,-},\ \text{where } \mathcal{N}_{Q,\pm} = \{\tau = \mp|\zeta|_{g^*(z)}\},$$

we define

$$\widetilde{\Lambda} = \widetilde{\Lambda}_+\cup\widetilde{\Lambda}_-,\ \text{where } \widetilde{\Lambda}_\pm = \widetilde{\Lambda}\cap\mathcal{N}_{Q,\pm}. \tag{6.67}$$

As above, we distinguish between the lifts of the wave equation associated to the right or left factor, and we define

$$Q_R(\tau, z, \zeta, z', \zeta') = \frac{1}{2}(|\zeta'|^2_{g^*(z')} - \tau^2) \text{ and } Q_L(\tau, z, \zeta, z', \zeta') = \frac{1}{2}(|\zeta|^2_{g^*(z)} - \tau^2), \tag{6.68}$$

and we will think of these as functions on $T^*(\mathbb{R} \times \mathring{X} \times \mathring{X})$, and H_{Q_R} and H_{Q_L} will denote their Hamilton vector fields.

These vector fields obviously commute, and therefore, for $t_1, t_2 \in \mathbb{R}$ and a point $(t, \tau, z, \zeta, z', \zeta') \in T^*(\mathbb{R} \times \mathring{X} \times \mathring{X}) \setminus 0$,

$$\exp t_2 H_{Q_L} \circ \exp t_1 H_{Q_R}(t, \tau, z, \zeta, z', \zeta') = \exp t_2 H_{Q_R} \circ \exp t_1 H_{Q_L}(t, \tau, z, \zeta, z', \zeta').$$

Moreover, away from

$$\Lambda_{0,\pm} = \{(t, \tau, z, \zeta, z', \zeta') \in T^*(\mathbb{R} \times \mathring{X} \times \mathring{X}) : \ t = 0, \ z = z', \ \zeta = -\zeta', \ \ \tau = \mp|\zeta|_{g^*(z)}\}, \tag{6.69}$$

$$\widetilde{\Lambda}_\pm \setminus \Lambda_{0,\pm} = \widetilde{\Lambda}_{\pm,R} \cup \widetilde{\Lambda}_{\pm,L}, \tag{6.70}$$

where

$$\widetilde{\Lambda}_{\pm,R} \doteq \bigcup_{\gamma>0} \exp \gamma H_{Q_R}(\Lambda_{0,\pm}) \text{ and } \widetilde{\Lambda}_{\pm,L} \doteq \bigcup_{\gamma>0} \exp \gamma H_{Q_L}(\Lambda_{0,\pm}). \tag{6.71}$$

Observe that the relations $\widetilde{\Lambda}_{\pm,R}$ and $\widetilde{\Lambda}_{\pm,L}$, with the same sign, are the inverse to each other. To see that one just has to realize that if $(t, \tau, z, \zeta) = \exp(\gamma H_{Q_R})(t_1, \tau, z', \zeta')$, then $(t_1, \tau, z', \zeta') = \exp(\gamma H_{Q_L})(t, \tau, z, \zeta)$.

As shown in Section 5.2 of [14], the Lagrangian Λ defined in (6.8) can be obtained from $\widetilde{\Lambda}_+$ by first taking $\widetilde{\Lambda}_+ \cap \{\tau = -1\}$, and then projecting in the t variable. As pointed out above, since Q does not depend on t, τ remains constant along the integral curves of H_Q, and hence one can think of $\widetilde{\Lambda}_+$ as a union of disjoint leaves parameterized by τ. Therefore $\widetilde{\Lambda}_+ \cap \{\tau = -1\}$ is a C^∞ submanifold $T^*(\mathbb{R} \times \mathring{X} \times \mathring{X})$. The next operation is the projection in the variable t. It follows from the definitions of Λ and $\widetilde{\Lambda}_+$ that if Π_t denotes the projection on the t-variable, and Λ is as in (6.8), we have

$$\Pi_t \left(\widetilde{\Lambda}_+ \cap \{\tau = -1\} \right) = \Lambda. \tag{6.72}$$

As observed in [14], a phase function that parametrizes $\widetilde{\Lambda}_+$ can be used to parametrize Λ. Indeed, suppose that $\Psi(t, z, z', \theta)$ parametrizes $\widetilde{\Lambda}_+$ near a point $\widetilde{\Lambda}_+$, then by definition,

$$\widetilde{\Lambda}_+ = \{(t, z, z', \tau, \zeta) : \tau = d_t\Phi, \ \ \zeta = d_z\Phi, \ d_{z'}\Phi = \zeta' \text{ on } d_\theta\Phi = 0\}.$$

Notice that the fibers of $\widetilde{\Lambda}_+$ consist of cones $\{\tau = -|\zeta|_{g^*(z)}\}$ and therefore $\widetilde{\Lambda}_+$ intersects $\{\tau = -1\}$ transversally. Then according to equations (5.2.11) and (5.2.12) of [14], if $\alpha = (t, \theta)$, the function

$$\Psi(z, z', \alpha) = t + \Phi(t, z, z', \theta) \tag{6.73}$$

is a phase function, and

$$\{d_\alpha\Psi(z, z', \alpha) = 0\} = \{d_t\Phi(t, z, z', \theta) = -1, \ d_\theta\Phi(t, z, z', \theta) = 0\}$$

and therefore, $\Psi(z, z', \alpha)$ parametrizes the Lagrangian

$$\Lambda = \{(z, \zeta, z', \zeta') : \zeta = d_z\Psi(z, z', \alpha), \ \zeta' = d_{z'}\Psi(z, z', \alpha) \text{ on } d_\alpha\Psi(z, z', \alpha) = 0\} = \Pi_t \left(\widetilde{\Lambda}_+ \cap \{\tau = -1\} \right).$$

Notice also that, since $\widetilde{\Lambda}_+$ is conic, $\Phi(t, z, z', \theta)$ is homogeneous in θ and by Euler's equation $\Phi(t, z, z', \theta) = 0$ on the set $d_\theta\Phi(t, z, z', \theta) = 0$. Therefore we conclude that

$$\Psi(z, z', \alpha) = t \text{ on } \{d_\alpha\Psi(z, z', \alpha) = 0\}. \tag{6.74}$$

But it is very important to notice that t is intrinsically well-defined on Λ. In view of (6.8), given $(z,\zeta,z',-\zeta')\in\Lambda$, there exists a t is the unique $t\in\mathbb{R}$ such that $(z,\zeta)=\exp(tH_p(z',-\zeta')\}$. So we have shown that Λ can always be locally parametrized by a phase function $\Psi(z,z',\alpha)$ satisfying (6.74).

The methods developed above can be used to analyze the global behavior of $\widetilde{\Lambda}_\pm$ up to $\partial T^*(\mathbb{R}_t\times X\times X)\backslash 0$ and describe the behavior of Λ up to infinity. As above we work on $\mathbb{R}\times(X\times_0 X)$ and by abuse of notation, we will also denote

$$\begin{aligned}\beta_0:\mathbb{R}_t\times X\times_0 X&\longrightarrow\mathbb{R}_t\times X\times X\\(t,m)&\longmapsto(t,\beta_0(m)).\end{aligned}\tag{6.75}$$

In the interior of $X\times_0 X$, β_0 is a diffeomorphism between open C^∞ manifolds, and the lift of the Lagrangian manifolds $\beta_0^*\widetilde{\Lambda}_{\pm,R},\beta_0^*\widetilde{\Lambda}_{\pm,L}\subset T^*(\mathbb{R}_t\times X\times_0 X)$ are naturally well-defined as the flow-out of the lift of (6.69) under the lifts $\beta_0^*H_{Q_R}$ and $\beta_0^*H_{Q_L}$.

The proof of the following theorem is very similar to the proof of Theorem 6.1:

Theorem 6.8. *Let $(\mathring{X},g)$ be a non-trapping CCM. Let ρ_L,ρ_R be boundary defining functions of L and R respectively. Let κ_R and κ_L denote the lifts of κ from the right and left factors respectively. Let*

$$\begin{aligned}\mathcal{M}:\mathbb{R}\times(X\times_0 X\setminus(R\cup L))&\longrightarrow\mathbb{R}\times X\times_0 X\\(s,m)&\longmapsto(s-\frac{1}{\kappa_L}\log\rho_L(m)-\frac{1}{\kappa_R}\log\rho_R(m),m)=(t,m)\end{aligned}\tag{6.76}$$

and define $\beta_1=\beta_0\circ\mathcal{M}:\mathbb{R}_s\times(X\times_0 X\setminus(R\cup L))\longrightarrow\mathbb{R}_t\times X\times X$, where β_0 is the map defined in (6.75)*. Let $\widetilde{\Lambda}_+\subset T^*(\mathbb{R}_t\times\mathring{X}\times\mathring{X})\setminus 0$ be the C^∞ conic Lagrangian submanifold defined in* (6.71)*. Then $\beta_1^*\widetilde{\Lambda}_+$, the lift of $\widetilde{\Lambda}_+$ by β_1 in the interior of $T^*(\mathbb{R}_s\times X\times_0 X)\setminus 0$, is C^∞ there. If κ is constant, then $\beta_1^*\widetilde{\Lambda}_+$ has a C^∞ extension across the boundary of $T^*(\mathbb{R}_s\times X\times_0 X)\setminus 0$. If $\kappa(y)$ is not constant, $\beta_1^*\widetilde{\Lambda}_+$ has a C^∞ extension across the front face, but has polyhomogeneous singularities at $T^*_{\{\rho_R=0\}}(\mathbb{R}_s\times X\times_0 X)$ and at $T^*_{\{\rho_L=0\}}(\mathbb{R}_s\times X\times_0 X)$. Moreover, the analogue of the expansions* (6.18) *hold.*

It follows from (6.72) that if Π_s denotes the projection in the s-variable,

$$\Pi_s(\beta_1^*\widetilde{\Lambda}_+\cap\{\sigma=-1\})=\Lambda^*.\tag{6.77}$$

Since t is globally defined on Λ, one can also view $s=t+\log\rho_R+\log\rho_L$ as a function globally defined on Λ^*. Similarly to the discussion above, a phase function that parametrizes $\beta_1^*\widetilde{\Lambda}_+$ can be used to parametrize Λ^*. Similarly to what we discusses above, $\Psi(s,m,\theta)$ parametrizes $\beta_1^*\widetilde{\Lambda}_+$ near a point $q\in\beta_1^*\widetilde{\Lambda}_+$, then

$$\beta_1^*\widetilde{\Lambda}_+=\{(s,m,\sigma,\zeta):\sigma=d_s\Phi,\ \ \zeta=d_m\Phi\text{ on }d_\theta\Phi=0\}.$$

Again, since in the interior of $X\times_0 X$, the fibers of $\beta_1^*\widetilde{\Lambda}_+$ are cones, $\beta_1^*\widetilde{\Lambda}_+$ and $\{\sigma=-1\}$ intersect transversally, and therefore if $\alpha=(s,\theta)$, the function

$$\Psi(m,\alpha)=s+\Phi(s,m,\theta)\tag{6.78}$$

is a phase function, and

$$\{d_\alpha\Psi(m,\alpha)=0\}=\{d_s\Phi(s,m,\theta)=-1,\ d_\theta\Phi(s,m,\theta)=0\}$$

and therefore, $\Psi(m,\alpha)$ parametrizes the Lagrangian

$$\Lambda^*=\{(m,\zeta):\zeta=d_m\Psi(m,\alpha)\text{ on }d_\alpha\Psi(m,\alpha)=0\}=\Pi_s(\beta_1^*\widetilde{\Lambda}_+).$$

As in the case discussed above, since $\beta_1^*\widetilde{\Lambda}_+$ is conic, we can also conclude that

$$\Psi(m,\alpha)=s\text{ on }\{d_\alpha\Psi(m,\alpha)=0\}.\tag{6.79}$$

So $\beta_1^*\widetilde{\Lambda}_+$ can always be locally parametrized by a phase function that satisfies (6.79).

We need to introduce the following concept:

Definition 6.9. *Let $(\mathring{X}, g)$ be a non-trapping CCM, and let $\Lambda^* \subset T^*(X \times_0 X)$ be the Lagrangian submanifold defined in Theorem 6.1. We say that $\{T^*\mathcal{O}_j,\ j \in \mathbb{N}\}$ is an admissible cover of Λ^* if $\mathcal{O}_j$ is a relatively open local chart of $X \times_0 X$, $\{T^*\mathcal{O}_j,\ j \in \mathbb{N}\}$ cover Λ^* (and here we identify $T^*\mathcal{O}_j$ with a subset of $[0,\infty) \times [0,\infty) \times [0,\infty) \times \mathbb{R}^{4n+1}$) such that*

i) if Λ^* is C^∞ up to R, L, there exist phase functions $\Psi_j \in C^\infty(\mathcal{O}_j \times \mathbb{R}^{N_j})$ satisfying (6.79) such that

$$\Lambda^* \cap T^*\mathcal{O}_j = \Lambda_{\Psi_j}.$$

ii) If Λ^* is polyhomogeneous at R and L, again we demand that Ψ_j satisfies (6.79) and that

$$\Lambda^* \cap T^*\mathcal{O}_j = \Lambda_{\Psi_j},\ \Psi_j \in C^\infty(\mathcal{O}_j \times \mathbb{R}^{N_j}) \text{ if } \mathcal{O}_j \cap (R \cup L) = \emptyset,$$

$$\Lambda^* \cap T^*\mathcal{O}_j = \Lambda_{\Psi_j},\ \Psi_j \in C^\infty(\mathring{\mathcal{O}}_j \times \mathbb{R}^{N_j}) \text{ and has an expansion (6.59) near } R \cup L,$$

$$\text{provided } \mathcal{O}_j \cap (R \cup L) \neq \emptyset.$$

7. Semiclassical Lagrangian distributions

We will work with a generalization of the class of Lagrangian distributions which were introduced by Hörmander [33] following a long history of work by several people, see [33] for an accurate historical account. The almost parallel semiclassical version of this concept has been studied by several people including Alexandrova [3], Chen and Hassell [9], Duistermaat [14, 15], and Guillemin and Sternberg [23]. One major difference between these theories is that the Lagrangian manifolds associated with semiclassical Lagrangian distributions are not necessarily conic. We will first recall the definition of semiclassical Lagrangian distributions with respect to Λ from [15]. We then define Lagrangian distributions with respect to Λ^*. In the latter case, Λ^* compact but it is only polyhomogeneous at the right and left faces. We will essentially extend the proof of Theorem 1.4.1 of [15] to this setting and globally up to the boundary of $T^*(X \times_0 X)$.

7.1. Lagrangian distributions with respect to Λ.

We begin by defining the space of semiclassical symbols that will be used

Definition 7.1. *Let $\mathcal{O} \subset \mathbb{R}^{2n+2}$ be an open subset. We define the space $S((0,h_0) \times \mathcal{O} \times \mathbb{R}^N)$, $N \in \mathbb{N}_0$, to be the space of functions $a : (0,h_0) \times \mathcal{O} \times \mathbb{R}^N \to \mathbb{C}$ such that there exist $a_j \in C^\infty(\mathcal{O} \times \mathbb{R}^N)$ satisfying*

$$\sup_{(z,z',\theta)} |\partial_z^{\alpha_1} \partial_{z'}^{\alpha_2} \partial_\theta^\beta a_j(z,z',\theta)| = C_{j,\alpha_1,\alpha_2,\beta} < \infty, \tag{7.1}$$

and such that for any $J \in \mathbb{N}$,

$$\sup_{(z,z',\theta)} |\partial_z^{\alpha_1} \partial_{z'}^{\alpha_2} \partial_\theta^\beta \left(a(h,z,z',\theta) - \sum_{j=0}^{J} h^j a_j(z,z',\theta) \right)| \leq C_{J,\alpha_1,\alpha_2,\beta} h^J \tag{7.2}$$

The space of Lagrangian distributions associated to $\Lambda \subset T^*(\mathring{X} \times \mathring{X})$ can be locally defined in terms of oscillatory integrals with a phase that parametrizes Λ, but satisfy (6.74). More precisely

Definition 7.2. *Let $(\mathring{X}, g)$ be a non-trapping CCM, and let Λ be the Lagrangian submanifold defined in (6.8) and let $\Omega^{\frac{1}{2}}$ denote the half-density bundle over $\mathring{X} \times \mathring{X}$. We say that A is a semiclassical Lagrangian distribution of order k with respect to Λ and denote $A \in I^k(\mathring{X} \times \mathring{X}, \Lambda, \Omega^{\frac{1}{2}})$ if there exists an open cover $\{\mathcal{O}_j\}$ of $\mathring{X} \times \mathring{X}$ and phase functions $\Psi_j \in C^\infty(\mathcal{O}_j \times \mathbb{R}^{N_j}; \mathbb{R})$ satisfying (6.74) such that $\Lambda \cap T^*\mathcal{O}_j = \Lambda_{\Psi_j}$, and symbols $a_j(h,z,z',\theta) \in S((0,h_0) \times \mathcal{O}_j \times \mathbb{R}^{N_j})$ compactly supported in θ such that for each $K \Subset \mathring{X} \times \mathring{X}$ there exists M such that for $u \in C_c^\infty(K; \Omega^{\frac{1}{2}})$, $\langle A, u \rangle = \sum_{j=1}^M \langle A_j, u \rangle$, where*

$$\begin{aligned} \langle A_j, u \rangle &= (2\pi h)^{-k-\frac{(d+2N_j)}{4}} \int_{\mathbb{R}^N} \int_K e^{\frac{i}{h}\Psi_j(z,z',\theta)} a_j(h,z,z',\theta) u(z)\, d\theta dz dz',\ \text{provided } N_j \geq 1, \\ \langle A_j, u \rangle &= (2\pi h)^{-k-\frac{d}{4}} \int_K e^{\frac{i}{h}\Psi_j(z,z')} a_j(h,z) u(z)\, dz dz', \quad \text{if } N_j = 0, \end{aligned} \tag{7.3}$$

$d = 2n+2$ is the dimension of $\mathring{X} \times \mathring{X}$.

It follows from the stationary phase theorem that if

$$A(a)(z,z') = (2\pi h)^{-k-\frac{(d+2N)}{4}} \int_{\mathbb{R}^N} e^{\frac{i}{h}\Psi(z,z',\theta)} a(h,z,\theta)\, d\theta,$$

and

$$C = C_\Psi = \{(z,z',\theta) : d_\theta \Psi(z,z',\theta) = 0\},$$

and if a_1 and a_2 are symbols such that $a_1(h,z,z',\theta) = a_2(h,z,z',\theta)$ on C, then

$$A(a_1)(z,z') - A(a_2)(z,z') = O(h).$$

One can define the principal symbol of A basically in the same way as in the case of Lagrangian distributions introduced by Hörmander [33, 34]. First pick local coordinates $\{\lambda_j,\ 1 \le j \le d\}$ on C, extend them to a neighborhood of C and let

$$d_C = |d\lambda_1 d\lambda_2 \dots d\lambda_d| \left| \frac{D(\lambda, \Phi'_\theta)}{D(z,\theta)} \right|^{-1},$$

which is independent of the choice of $\{\lambda_j\}$. One then defines the half-density valued symbol $a_C(h,z,z'\theta)\sqrt{d_C}$ on the manifold C.

Recall that the map

$$\begin{aligned} C &\longrightarrow \Lambda \\ (z,z',\theta) &\longmapsto (z,z',d_{z,z'}\Phi(z,z',\theta)) \end{aligned} \tag{7.4}$$

is a diffeomorphism and it turns out that if $a \sim a_0 + ha_1 + \dots$, and $a_C = a|_C$, is the restriction of a to C, the push-forward of $a_C(h,z,z',\theta)\sqrt{d_C}$ from C to Λ^* via the map defined above, which is still denoted by $a_C\sqrt{d_C}$, is invariant under a change of phase function that locally parametrizes Λ. We define this class of symbols by $S(\Lambda, \Omega_\Lambda^{\frac{1}{2}})$. Moreover, it turns out that if $a(h,z,z',\theta) \in S((0,h_0) \times \mathcal{O} \times \mathbb{R}^{N_1})$, $a \sim a_0 + ha_1 + \dots$, $b(h,z,z',\theta') \in S((0,h_0) \times \mathcal{O} \times \mathbb{R}^{N_2})$, $b \sim b_0 + hb_1 + \dots$ and two phase functions $\Phi(z,\theta)$ and $\Psi(z,\theta')$ that parametrize Λ on a neighborhood of $q \in \Lambda$, and

$$(2\pi h)^{-k-\frac{(d+2N_1)}{4}} \int_{\mathbb{R}^{N_1}} e^{\frac{i}{h}\Phi(z,\theta)} a(h,z,\theta) d\theta = (2\pi h)^{-k-\frac{(d+2N_2)}{4}} \int_{\mathbb{R}^{N_2}} e^{\frac{i}{h}\Psi(z,\theta')} b(h,z,\theta') d\theta',$$

then

$$e^{i\frac{\sigma}{h}\Phi_{C_\Phi}} e^{i\frac{\pi}{4}\operatorname{sgn}\Phi''_{\theta\theta}} a_C\sqrt{d_C} - e^{i\frac{\sigma}{h}\Psi_{C_\Psi}} e^{i\frac{\pi}{4}\operatorname{sgn}\Psi''_{\theta'\theta'}} b_C\sqrt{d_C} \in hS(\Lambda, \Omega_\Lambda^{\frac{1}{2}}), \tag{7.5}$$

where Φ_{C_Φ} and Ψ_{C_Ψ} are respectively is the restriction of Φ to the manifold C_Φ and Ψ to C_Ψ. But since Ψ and Φ satisfy (6.74), $\Phi_{C_\Phi} = \Psi_{C_\Psi} = t$. As in [15], one can then use (7.13) to define the principal symbol of the Lagrangian distribution A as an element of $e^{i\frac{\sigma}{h}t} S(\Lambda, M_\Lambda \otimes \Omega_\Lambda^{\frac{1}{2}})$, where M_{Λ^*} is the Maslov line bundle defined in [33, 34], and we have the principal symbol map:

$$I^k(\mathring{X} \times \mathring{X}, \Lambda, \Omega^{\frac{1}{2}})/I^{k-1}(\mathring{X} \times \mathring{X}, \Lambda, \Omega^{\frac{1}{2}}) \longrightarrow e^{i\frac{\sigma}{h}t} S(\Lambda, M_\Lambda \otimes \Omega_\Lambda^{\frac{1}{2}})/hS(\Lambda, M_\Lambda \otimes \Omega_\Lambda^{\frac{1}{2}})$$

which locally is of the form

$$\sigma^k(A) = e^{i\frac{\sigma}{h}t} e^{i\frac{\pi}{4}\operatorname{sgn}\Phi''_{\theta\theta}} a_{0C}\sqrt{d_C}, \tag{7.6}$$

where $\Phi \in C^\infty(\mathcal{O} \times \mathbb{R}^N)$ parametrizes Λ, $a(h,z,\theta) = a_0(z,\theta) + O(h)$, and $a_0|_C$ is the restriction of a_0 to C. Notice that this only involves derivatives of the phase function in θ.

We also need the following result about composition of semiclassical differential operators and semiclassical Lagrangian distributions. Let $P(h,\sigma,D) = h^2(\Delta_g(z) - \frac{\kappa_0 n^2}{4}) - \sigma^2$, and let P_L be the operator on $\int x \times \mathring{X}$ obtained by lifting P to the left factor of $\mathring{X} \times \mathring{X}$. The semiclassical principal symbol of $P_L(h,\sigma,D)$ is equal to $p_L(z,\zeta,z',\zeta') = |\zeta|^2_{g^*(z)} - 1$, which by definition vanishes on Λ. The principal symbol of $P_L A$ is given by the following analogue of Theorem 25.2.4 of [34]. In fact its proof is very similar to that of the reference, but it can be found in equation 1.1.13 of [15].

Proposition 7.3. *Let Λ be the Lagrangian manifold defined in* (6.8)*, let $P_L(h,\sigma,D)$ be as above, and let $A \in I^k(\mathring{X}\times\mathring{X},\Lambda,\Omega^{\frac{1}{2}})$, have principal symbol $e^{i\frac{\sigma}{h}t}a$, with $a \in S(\Lambda, M_\Lambda \otimes \Omega_\Lambda^{\frac{1}{2}})$. Then $P_L A \in I^{k-1}(\mathring{X}\times\mathring{X},\Lambda,\Omega^{\frac{1}{2}})$ and*

$$\sigma^{k-1}(P_L A) = e^{i\frac{\sigma}{h}t}(\frac{1}{i}\mathcal{L}_{H_{p_L}} a + p_{L,sp} a), \tag{7.7}$$

where H_{p_L} is the Hamilton vector field of p_L, and $p_{L,sp}$ is the semiclassical subprincipal symbol of p_L.

Recall that if $p(h,z,\zeta) = p_0(z,\zeta) + hp_1(z,\zeta) + O(h^2)$, then

$$p_{sp}(z,\zeta) = p_1(z,\zeta) - \frac{1}{2i}\sum_{j=1}^{n}\frac{\partial^2 p_0(z,\zeta)}{\partial z_j \partial \zeta_j}.$$

7.2. **Lagrangian distributions with respect to Λ^*.** We begin by defining the space of semiclassical symbols that will be used:

Definition 7.4. *Let $\mathcal{O} \subset [0,\infty)_{x_1} \times [0,\infty)_{x_2} \times \mathbb{R}^{2n}_{x'}$ be a relatively open subset. We define the space $S((0,h_0)\times\mathcal{O}\times\mathbb{R}^N)$, $N \in \mathbb{N}_0$, to be the space of functions $a : (0,h_0)\times\mathcal{O}\times\mathbb{R}^N \to \mathbb{C}$, such that*

i) If $\mathcal{O}\cap(\{x_1=0\}\cup\{x_2=0\}) = \emptyset$, there exist $a_j \in C^\infty(\mathcal{O}\times\mathbb{R}^N)$ with

$$\sup_{(x,\theta)} |\partial_x^\alpha \partial_\theta^\beta a_j(x,\theta)| = C_{j,\alpha,\beta} < \infty, \tag{7.8}$$

and such that for any $J \in \mathbb{N}$,

$$\sup_{(x,\theta)} |\partial_x^\alpha \partial_\theta^\beta \left(a(x,h,\theta) - \sum_{j=0}^{J} h^j a_j(x,\theta)\right)| \le C_{J,\alpha,\beta} h^{J+1} \tag{7.9}$$

ii) If $\mathcal{O}\cap(\{x_1=0\}\cup\{x_2=0\}) \neq \emptyset$, there exist C^∞ functions $a_\bullet(x',\theta)$, $\bullet \in \mathbb{N}^5$, such that

$$\sup_{(x',\theta)} |\partial_{x'}^\alpha \partial_\theta^\beta a_\bullet(x',\theta)| = C_{\bullet,\alpha,\beta} < \infty, \tag{7.10}$$

and for any $J, L \in \mathbb{N}$, and $\delta > 0$ there exists $C(J,L,\delta) > 0$ such that for

$$\begin{gathered} \mathcal{E}_{J,L}(h,x,\theta) = a(x,h,\theta) - \sum_{j_1,j_2=0}^{J}\sum_{k_1=0}^{j_1}\sum_{k_2=0}^{j_2}\sum_{l=0}^{L} x_1^{j_1}(\log x_1)^{k_1} x_2^{j_2}(\log x_2)^{k_2} h^l a_\bullet(x',\theta), \\ \bullet = (j_1,j_2,k_1,k_2,l),\ \sup_{(x',\theta)} |\partial_{x'}^\alpha \partial_\theta^\beta \mathcal{E}_{J,L}(h,x,\theta)| \le C(J,L,\delta) h^{L+1} |(x_1,x_2)|^{J-\delta}. \end{gathered} \tag{7.11}$$

It is a consequence of Borel's lemma, see Theorem 2.1.6 of [34], that given a sequence $a_\bullet(x',\theta)$ satisfying (7.10) one can find a function $a(x,h,\theta)$ such that (7.11) holds.

Now we define the semiclassical Lagrangian distributions with respect to Λ^* :

Definition 7.5. *Let $\Lambda^* \subset T^*(X\times_0 X)$ be as above, and let $\Omega^{\frac{1}{2}}$ denote the half-density bundle over $X\times_0 X$. We say that A is a polyhomogeneous semiclassical Lagrangian distribution of order k with respect to Λ^*, and denote $A \in I^k_{ph}(X\times_0 X,\Lambda^*,\Omega^{\frac{1}{2}})$ if there exists an admissible cover $(T^*\mathcal{O}_j,\Phi_j)$ of Λ^*, and symbols $a_j(z,h,\theta) \in S((0,h_0)\times\mathcal{O}_j\times\mathbb{R}^{N_j})$ compactly supported in θ, such that for each $K \Subset X\times_0 X$ there exists M such that for $u \in C_c^\infty(K;\Omega^{\frac{1}{2}})$, $\langle A,u\rangle = \sum_{j=1}^M \langle A_j,u\rangle$, where*

$$\begin{gathered} \langle A_j,u\rangle = (2\pi h)^{-k-\frac{(d+2N_j)}{4}} \int_{\mathbb{R}^N}\int_K e^{\frac{i}{h}\Phi_j(z,\theta)} a_j(h,z,\theta) u(z)\, d\theta dz,\ \textit{provided } N_j \ge 1, \\ \langle A_j,u\rangle = (2\pi h)^{-k-\frac{d}{4}} \int_K e^{\frac{i}{h}\Phi_j(z)} a_j(h,z) u(z)\, dz, \quad \textit{if } N = 0, \end{gathered} \tag{7.12}$$

and $d = 2n+2$ is the dimension of $X\times_0 X$.

Consider one of these oscillatory integrals in (7.12),

$$A(a)(z) = (2\pi h)^{-k-\frac{(d+2N)}{4}} \int_{\mathbb{R}^N} e^{\frac{i}{h}\Phi(z,\theta)} a(h,z,\theta)\, d\theta.$$

According to the definition, the function Φ may have polyhomogeneous singularities at $R \cup L$, but it is C^∞ in θ. Therefore, just as in the case of standard Lagrangian distributions, it follows from the stationary phase theorem that if

$$C = C_\Phi = \{(z,\theta) : d_\theta \Phi(z,\theta) = 0\},$$

and $a_1(h,z,\theta)$ and $a_2(h,z,\theta)$ are such that $a_1|_C = a_2|_C$, then

$$A(a_1)(z) - A(a_2)(z) = O(h).$$

The proof of this statement requires integration by parts, but recall that the phase function is C^1 in all variables, so this is not a problem.

As in the case of Λ, one can define the principal symbol of A in the same way as in the case of C^∞ Lagrangian distributions. Pick local coordinates $\{\lambda_j,\ 1 \le j \le 2n+2\}$ on C, extend them to a neighborhood of C and let

$$d_C = |d\lambda_1 d\lambda_2 \dots d\lambda_d| \left| \frac{D(\lambda, \Phi'_\theta)}{D(z,\theta)} \right|^{-1},$$

which is independent of the choice of $\{\lambda_j\}$. One then defines the half-density valued symbol $a_C(h,z,\theta)\sqrt{d_C}$ on the manifold C, where $a \sim a_0 + ha_1 + ...$, $a_C = a|_C$. To see that this is well defined and polyhomogeneous up to the boundary one can use the expansion of $\Phi(z,\theta)$ given by (6.59). Here it is important that the expansion starts in x_j^2, $j = 1,2$, and so the Jacobian is well defined up to the boundary. Notice that the Jacobian has two derivatives in θ and one mixed derivative in (z,θ), but it does not have two derivatives in z, and in particular in x_j, $j = 1,2$. However, we need to observe that the mixed derivatives $\partial_{x_j}\partial_{\theta_k}\Phi$ may have terms involving $x_1^{j_1}(\log x_1)^{k_1}$ or $x_2^{j_2}(\log x_2)^{k_2}$ with $k_1 = j_1 + 1$, $k_2 = j_2 + 1$, which does not fit our definition of polyhomogeneity. However, if one picks $\lambda_1 = x_1$, $\lambda_2 = x_2$, $z = (x_1, x_2, y)$, such that $H_{\wp_R} = \partial_{x_2}$ and $H_{\wp_L} = \partial_{x_1}$, as in the proof of Theorem 6.5, then the first two rows of the matrix $\frac{D(\lambda,\Phi'_\theta)}{D(z,\theta)}$ are of the form $(1,0,\dots 0)$, and $(0,1,0,\dots,0)$ respectively and hence the mixed derivatives $\partial_{x_j}\partial_{\theta_k}\Phi$, $j = 1,2$, do not appear in the determinant. Therefore, with this choice of λ and z, the Jacobian $\left|\frac{D(\lambda,\Phi'_\theta)}{D(z,\theta)}\right|^{-1}$ has a polyhomogeneous expansion in (x_1, x_2). But since this is independent

Now, recall that the map

$$\begin{aligned} C_\Phi &\longrightarrow \Lambda^* \\ (z,\theta) &\longmapsto (z, d_z\Phi(z,\theta)) \end{aligned}$$

is a diffeomorphism in the interior, and again the push-forward of $a_C(z,\theta)\sqrt{d_C}$ from C to Λ^* via the map defined above, which is still denoted by $a_C\sqrt{d_C}$, is invariant under a change of phase function that locally parametrizes Λ^*. Since this is polyhomogeneous for the choice of phase function given by Theorem 6.5, then it is always polyhomogeneous. So, as before, we define this class of symbols by $S(\Lambda^*, \Omega_\Lambda^{\frac{1}{2}})$.

As in the case of Λ^*, if we have two symbols $a(h,z,\theta) \in S((0,h_0) \times \mathcal{O} \times \mathbb{R}^{N_1})$, $b(h,z,\theta') \in S((0,h_0) \times \mathcal{O} \times \mathbb{R}^{N_2})$, and two phase functions $\Psi_1(z,\theta)$ and $\Psi_2(z,\theta')$ that parametrize Λ^*, and

$$(2\pi h)^{-k-\frac{(d+2N_1)}{4}} \int_{\mathbb{R}^{N_1}} e^{\frac{i}{h}\Psi_1(z,\theta)} a(h,z,\theta) d\theta = (2\pi h)^{-k-\frac{(d+2N_2)}{4}} \int_{\mathbb{R}^{N_2}} e^{\frac{i}{h}\Psi_2(z,\theta')} b(h,z,\theta') d\theta',$$

then if $\Psi_{j,C_{\Psi_j}}$ is the restriction of Ψ_j to C_{Ψ_j},

$$e^{i\frac{\sigma}{h}\Psi_{1,C_{\Psi_1}}} e^{i\frac{\pi}{4}\operatorname{sgn}\Phi''_{\theta\theta}} a_C \sqrt{d_{C_{\Psi_1}}} - e^{i\frac{\sigma}{h}\Psi_{2,C_{\Psi_2}}} e^{i\frac{\pi}{4}\operatorname{sgn}\Psi''_{\theta'\theta'}} b_C \sqrt{d_{C_{\Psi_2}}} \in hS(\Lambda^*, \Omega_{\Lambda^*}^{\frac{1}{2}}). \tag{7.13}$$

The terms $e^{i\frac{\sigma}{h}\Psi_{j,C}}$, $j = 1,2$, do not appear in the case when Λ^* is conic, as they are equal to one. Here they appear, and represent a delicate problem. However, since Ψ_j, $j = 1,2$, are admissible, they satisfy (6.79),

and so $\Psi_{j,C} = s$. We then use (7.13) to define the principal symbol of the Lagrangian distribution A as an element of $e^{i\frac{\sigma}{h}s}S(\Lambda^*, M_{\Lambda^*} \otimes \Omega_\Lambda^{\frac{1}{2}})$, where M_{Λ^*} is the Maslov line bundle defined in [33, 34],

$$I^k(X \times_0 X, \Lambda^*, \Omega^{\frac{1}{2}})/I^{k-1}(X \times_0 X, \Lambda^*, \Omega^{\frac{1}{2}}) \longrightarrow e^{i\frac{\sigma}{h}s}S(\Lambda^*, M_{\Lambda^*} \otimes \Omega_{\Lambda^*}^{\frac{1}{2}})/hS(\Lambda^*, M_{\Lambda^*} \otimes \Omega_{\Lambda^*}^{\frac{1}{2}}),$$

which locally is of the form

$$\sigma^k(A) = e^{i\frac{\pi}{4}\operatorname{sgn}\Psi''_{\theta\theta}} e^{i\frac{\sigma}{h}s} a_{0C}\sqrt{d_C}, \tag{7.14}$$

where $\Psi \in C^\infty(\mathcal{O} \times \mathbb{R}^N)$ is an admissible phase function that parametrizes Λ^* and $a_{0C} = a_0|_C$, where $a = a_0 + ha_1 + ...$, satisfies the hypotheses of Definition 7.4. Notice that this definition only involves derivatives in θ, and is perfectly well-defined for our class of phase functions. Here the existence of the function s makes it possible to define the principal symbol globally. In general there is a topological restriction to the global definition of the principal symbol, see for example [5, 15].

We should remark that the definitions above involve real-valued phase functions, but we can apply them without a problem to oscillatory integrals with phase $\sigma\Phi$, as long as $\sigma = 1 + h\sigma'$, $\sigma' \in (-c, c) \times i(-C, C)$. In this case $e^{-i\frac{\sigma}{h}\Phi} = e^{-\frac{i}{h}\Phi}e^{-i\sigma'\Phi}$, and the factor $e^{-i\sigma'\Phi}$ can be thought to be part of the symbol of the Lagrangian distribution.

8. The third step of the proof: The construction of $G_2(h, \sigma)$

In this section we will use the semiclassical Lagrangian distributions we have just defined to remove the error on the semiclassical face. We have completed the first two steps in the construction of the parametrix: Combining Lemma 5.1 and Lemma 5.2 gives an operator $G_1'(h, \sigma) = G_0(h, \sigma) + G_1(h, \sigma)$ holomorphic in $\sigma \in \Omega_\hbar = (1 - ch, 1 + ch) \times -i(-Ch, Ch)$, $c > 0$, $C > 0$, such that

$$\begin{gathered} P(h, \sigma, D)G_1'(h, \sigma) - \mathrm{Id} = E_1(h, \sigma), \\ E_1(h, \sigma) = E_1'(h, \sigma) + e^{i\frac{\sigma}{h}r}F_1(h, \sigma), \quad E_1' \in \rho_{\mathcal{S}}^\infty \Psi_{0,\hbar}^{-\infty}(X), \quad F_1 \in \rho_{\mathcal{S}}^\infty \Psi_{0,\hbar}^{-\infty,\infty,-\frac{n}{2},\infty}(X) \\ \text{and with } \beta_\hbar^* K_{F_1} \text{ supported away from } \mathcal{L},\ \mathcal{R}, \end{gathered} \tag{8.1}$$

and $K_{E_1'}$ is supported near $\mathrm{Diag}_\hbar$ while $\beta_\hbar^* K_{F_1}$ supported away from $\mathrm{Diag}_\hbar$. As mentioned before, the error E_1' is already good for our purposes, but we need to remove the error $e^{i\frac{\sigma}{h}r}F_1$, since it does not vanish at the semiclassical face $\mathcal{A}$. Here it is very important that $\beta_\hbar^* K_{F_1}$ is compactly supported in a neighborhood of $\mathcal{S}$ and vanishes to infinite order at $\mathrm{Diag}_\hbar$, see Fig.5. The third step of the construction is given by the following lemma.

Lemma 8.1. *Let $(\mathring{X}, g)$ be a non-trapping CCM, and let $F_1(h, \sigma)$ be as in (8.1). Then there exist $h_0 > 0$ and operators $G_2(h, \sigma)$ and $E_2(h, \sigma)$ with Schwartz kernels K_{G_2} and K_{E_2} such that $\beta_0^* K_{G_2} \in e^{-i\frac{\sigma}{h}\tilde{\gamma}} I_{ph}^{\frac{1}{2}}(X \times_0 X, \Lambda^*, \Omega^{\frac{1}{2}})$ and $\beta_0^* K_{E_2} \in e^{-i\frac{\sigma}{h}\tilde{\gamma}} I_{ph}^{-\infty}(X \times_0 X, \Lambda^*, \Omega^{\frac{1}{2}})$, holomorphic in $\sigma \in \Omega_\hbar$, with $h \in (0, h_0)$, where $\tilde{\gamma}$ is defined in (3.9) and are such that*

$$(h^2(\Delta_{g(z)} - \frac{\kappa_0 n^2}{4}) - \sigma^2)G_2(h, \sigma) - e^{i\frac{\sigma}{h}r}F_1(h, \sigma) = E_2(h, \sigma). \tag{8.2}$$

Proof. Instead of having to deal with the factor $\rho_\bullet^{\frac{n}{2}}$ in the expansions, it is convenient to work with

$$Q(h, \sigma, D) = x^{-\frac{n}{2}}(h^2(\Delta_g - \frac{\kappa_0 n^2}{4}) - \sigma^2)x^{\frac{n}{2}}. \tag{8.3}$$

Notice that $Q(h, \sigma, D) - P(h, \sigma, D) = O(h)$, so they have the same semiclassical principal symbol. So we denote

$$Q_L(h, \sigma, D) = \beta_0^* Q(h, \sigma, D), \tag{8.4}$$

$F_1 = x^{\frac{n}{2}}\widetilde{F}_1$, and $G_2 = x^{\frac{n}{2}}\widetilde{G}_2$. We also know from (8.1) that $\beta_0^* K_{\widetilde{F}_1}$ has an expansion

$$\beta_0^* K_{\widetilde{F}_1} \sim h^{-\frac{n}{2}} \sum_{j=0}^{\infty} h^j \widetilde{F}_{1,j}(\sigma', m).$$

So the first step is to find $\widetilde{G}_{2,0}(h,\sigma)$ with $\beta_0^* K_{\widetilde{G}_{2,0}} \in e^{-i\frac{\sigma}{h}\tilde{\gamma}} I^{\frac{1}{2}}_{ph}(X \times_0 X, \Lambda^*, \Omega^{\frac{1}{2}})$ such that if $\beta_0^* K_{\widetilde{F}_{1,0}} = h^{-\frac{n}{2}}\widetilde{F}_{1,0}$, then

$$Q(h,\sigma,D)\widetilde{G}_{2,0}(h,\sigma) - e^{i\frac{\sigma}{h}r}\widetilde{F}_{1,0}(h,\sigma) = h\mathcal{E}_1(h,D),\ \beta_0^* K_{\mathcal{E}_1} \in e^{-i\frac{\sigma}{h}\tilde{\gamma}} I^{\frac{1}{2}}_{ph}(X \times_0 X, \Lambda^*, \Omega^{\frac{1}{2}}). \tag{8.5}$$

Since in $\mathring{X} \times \mathring{X}$, $h^{-\frac{n}{2}} e^{i\frac{\sigma}{h}r}\widetilde{F}_{1,0}(\sigma', m)$ is a semiclassical Lagrangian distribution of order $-\frac{1}{2}$ with respect to the manifold Λ defined in (6.6), one would expect that, again in $\mathring{X} \times \mathring{X}$, the kernel of $G_{2,0}$, $K_{\widetilde{G}_{2,0}} \in I^{\frac{1}{2}}(\mathring{X} \times \mathring{X}, \Lambda, \Omega^{\frac{1}{2}})$. If $e^{i\frac{\sigma}{h}t} g_{2,0}$, with $g_{2,0} \in S(\Lambda, M_\Lambda \otimes \Omega_\Lambda^{\frac{1}{2}})$ is the semiclassical principal symbol of $K_{G_{2,0}}$, $e^{i\frac{\sigma}{h}t}\widetilde{F}_{1,0}$ is the principal symbol of $\widetilde{F}_{1,0}(h,\sigma)$, q and q_{sp} are the semiclassical principal symbol and subprincipal symbol of $Q(h,\sigma,D)$, then according to (7.7)

$$e^{i\frac{\sigma}{h}t}\left(\frac{1}{i}\mathcal{L}_{H_q} g_{2,0} + q_{sp} g_{2,0}\right) = e^{i\frac{\sigma}{h}t}\widetilde{F}_{1,0}. \tag{8.6}$$

This equation can be solved in $\mathring{X} \times \mathring{X}$ without a problem, but the whole point is to describe the asymptotic behavior of $g_{2,0}$ at the right and left faces of $T^*(X \times_0 X)$. Since β_0 is a diffeomorphism in the interior of $X \times_0 X$, this equation lifts to an equation on $\beta_0^*\Lambda$ in the interior of $T^*X \times_0 X$ given by

$$e^{i\frac{\sigma}{h}t}\left(\frac{1}{i}\mathcal{L}_{H_{q_L}} g_{2,0} + q_{Ls} g_{2,0}\right) = e^{i\frac{\sigma}{h}t}\widetilde{F}_{1,0},\ \text{on } \beta_0^*\Lambda,\ \text{and } g_{2,0} = 0 \text{ on } \Lambda_0 \times [0, h_0), \tag{8.7}$$

where, by abuse of notation, $g_{2,0}$ also denotes the principal symbol of $\beta_0^* K_{\widetilde{G}_{2,0}}$, $e^{i\frac{\sigma}{h}t} q_L$ and $e^{i\frac{\sigma}{h}t} q_{Ls}$ denote the semiclassical principal symbol and subprincipal symbol of $\beta_0^* Q(h,\sigma,D)$. But as we know, $\beta_0^*\Lambda$ is not smooth up to the right and left faces, and so one should try to work with Λ^*. But if $\varphi \in C^\infty(X \times_0 X)$, the map $T^*(X \times_0 X) \ni (m,\nu) \longmapsto (m, \nu + d\varphi) \in T^*(X \times_0 X)$ preserves the canonical 2-form, and we also know from (3.9) that $Q_{L,\gamma} = e^{\frac{i}{h}\gamma} Q_L(h,\sigma,D) e^{-\frac{i}{h}\gamma}$ and $Q_{L,\tilde{\gamma}} = e^{\frac{i}{h}\tilde{\gamma}} Q_L(h,\sigma,D) e^{-\frac{i}{h}\tilde{\gamma}}$ satisfy $Q_{L,\gamma} - Q_{L,\tilde{\gamma}} = O(h^2)$, so they have the same principal and subprincipal symbols. So if $q_{L,\gamma}$ and $q_{L,sp,\gamma}$ are the semiclassical principal and subprincipal symbols of $Q_{L,\gamma}(h,\sigma,D)$, equation (8.7) becomes

$$\begin{gathered} e^{i\frac{\sigma}{h}s}\left(\frac{1}{i}\mathcal{L}_{H_{q_L}} g^*_{2,0} + q_{L,sp,\gamma} g^*_{2,0}\right) = e^{i\frac{\sigma}{h}s}\widetilde{F}_{1,0} \text{ on } \Lambda^*,\ g_{2,0} = e^{-i\frac{\sigma}{h}\tilde{\gamma}} g^*_{2,0}, \\ g_{2,0} = 0 \text{ near } \operatorname{Diag}_0 \times [0, h_0). \end{gathered} \tag{8.8}$$

Again, due to the non-trapping assumptions, this equation can be solved up to L. Notice that the factor $e^{i\frac{\sigma}{h}t}$ changes accordingly to $e^{i\frac{\sigma}{h}s}$. However, to understand its asymptotics at L one needs to work in local coordinates. Let $\{(T^*\mathcal{O}_j, \Phi_j)\}$ be an admissible cover near the left face. In the interior of each $\mathcal{O}_j$ we have

$$\beta_0^* K_{\widetilde{G}_{2,0}}(m,\sigma,h) = (2\pi h)^{-\frac{n}{2}-1-\frac{N}{2}} e^{-i\frac{\sigma}{h}\tilde{\gamma}} \int_K e^{i\frac{\sigma}{h}\Phi_j(m,\theta)} g_{2,0}(m,\theta)\, d\theta,\quad K \Subset \mathbb{R}^N, \tag{8.9}$$

and hence

$$\begin{gathered} e^{i\frac{\sigma}{h}\tilde{\gamma}} Q_L(h,\sigma,D)\beta_0^* K_{\widetilde{G}_{2,0}} = \\ (2\pi h)^{-\frac{n}{2}-1-\frac{N}{2}} e^{-i\frac{\sigma}{h}\tilde{\gamma}} \int_{\mathbb{R}^N} e^{-i\frac{\sigma}{h}\Phi_j(m,\theta)} Q_L(h,\sigma,D + \sigma d_m(\Phi(m,\theta) - \tilde{\gamma})) g_{2,0}(m,\theta)\, d\theta. \end{gathered}$$

As mentioned above, we are working with $\sigma = 1 + h\sigma'$, $\sigma' \in (-c,c) \times i(-C,C)$, and in this case $e^{-i\frac{\sigma}{h}\Phi_j(m,\theta)} = e^{-\frac{i}{h}\Phi_j(m,\theta)} e^{-i\sigma'\Phi_j(m,\theta)}$, and the latter part can be viewed as part of the amplitude $g_{2,0}$ in the definition of the oscillatory integral. By doing this we are just simplifying the construction of the symbols.

Since $\widetilde{F}_{1,0}$ is compactly supported in the interior of $T^*(X \times_0 X)$, we want

$$Q_L(h,\sigma,D+\sigma d_m(\Phi(m,\theta)-\tilde{\gamma}))g_{2,0}(m,\theta) = hB_j(m,\theta). \tag{8.10}$$

We shall denote

$$Q_{L,\Phi,\tilde{\gamma}} = Q_L(h,\sigma,D+\sigma d_m(\Phi(m,\theta)-\tilde{\gamma})) \tag{8.11}$$

In view of (2.3), then in local coordinates in $X \times_0 X$ it must be of the form

$$Q_L(h,\sigma,D) = \sum_{jk} a_{jk}(m)hD_jhD_k + i\sum_j hb_j(m)hD_j + \frac{h^2n^2}{4}(\kappa_L^2-\kappa_0^2) - \sigma^2, \tag{8.12}$$

and so

$$\begin{aligned} Q_{L,\Phi,\tilde{\gamma}}(h,\sigma,D) = \sum_{jk} a_{jk}(m)(hD_j+\sigma\partial_j(\Phi-\tilde{\gamma}))(hD_k+\sigma\partial_k(\Phi-\tilde{\gamma}))+ \\ i\sum_j hb_j(m,h)(hD_j+\sigma\partial_j(\Phi-\tilde{\gamma})) + C \end{aligned}$$

and this can be written as

$$\begin{aligned} Q_{L,\Phi,\tilde{\gamma}}(h,\sigma,D) = \sum_{jk} a_{jk}hD_jhD_k + i\sum_j \tilde{B}_jhD_j + C, \text{ where} \\ \tilde{B}_j = -2i\sigma\sum_k a_{jk}\partial_k(\Phi-\tilde{\gamma}) + hb_j, \\ C = \sigma^2\left(\sum_{jk} a_{jk}\partial_j(\Phi-\tilde{\gamma})\partial_k(\Phi-\tilde{\gamma})\right) - \sigma^2 - ih\sigma\sum_{jk} a_{jk}\partial_k\partial_j(\Phi-\tilde{\gamma})+ \\ ih\sigma\sum_j b_j\partial_j(\Phi-\tilde{\gamma}) + \frac{h^2n^2}{4}(\kappa_L^2-\kappa_0^2). \end{aligned} \tag{8.13}$$

We will analyze the behavior of the term

$$C_0(h,\sigma,m,\theta) = \sigma^2\left(\sum_{jk} a_{jk}\partial_j(\Phi-\tilde{\gamma})\partial_k(\Phi-\tilde{\gamma})\right) - \sigma^2 + \frac{h^2n^2}{4}(\kappa_L^2-\kappa_0^2) \tag{8.14}$$

in (8.13) near $\{\rho_L = 0\}$. Of course, by symmetry we also get the behavior on the right face, we would just need to work with the operator $Q_R(h,\sigma,D)$ on the right factor instead.

We have that in coordinates (2.2),

$$\begin{aligned} Q(h,\sigma,D) = h^2\kappa^2(y)(xD_x)^2 + h^2x^2\Delta_H + ih^2x^2\sum_j B_jD_{y_j}+ \\ ih^2x^2FD_x + \frac{h^2n^2}{4}(\kappa(y)^2-\kappa_0^2) - \sigma^2. \end{aligned} \tag{8.15}$$

We need to lift the principal part of this operator to $X \times_0 X$ and compute $C_0(h,\sigma,m,\theta)$. We work in the regions near the co-dimension 3 corner, and we use coordinates (6.24). The computations for the other regions are simpler. According to (6.25), we have

$$\begin{aligned} Q_L(h,\sigma,D) = \beta_0^*Q(h,\sigma,D) = -h^2\kappa_L^2(x_1\partial_{x_1})^2 - h^2x_1^2\sum_{j,k} H^{jk}\mathcal{U}_j\mathcal{U}_k+ \\ h^2x_3x_1^2F_1\partial_{x_1} + h^2x_1^2x_2F_2\partial_{x_2} + h^2x_1^2x_3F_3\partial_{x_3} + h^2x_1^2\sum_j B_j\partial_{Y_j}, \end{aligned} \tag{8.16}$$

and therefore, in view of (8.14),

$$\begin{aligned} C_0(h,\sigma,m,\theta) = \sigma^2\kappa_L^2 {x_1}^2(\partial_{x_1}(\Phi-\tilde\gamma))^2 - \sigma^2 + \frac{h^2n^2}{4}(\kappa_L^2-\kappa_0^2)+ \\ \sigma^2{x_1}^2 H^{11}(\mathcal{U}_1(\Phi-\tilde\gamma))^2 + 2\sigma^2{x_1}^2\sum_{j=2}^n H^{1j}(\mathcal{U}_1(\Phi-\tilde\gamma))(\partial_{Y_j}(\Phi-\tilde\gamma))+ \\ \sigma^2{x_1}^2\sum_{j,k=2}^n H^{jk}(\partial_{Y_j}(\Phi-\tilde\gamma))(\partial_{Y_k}(\Phi-\tilde\gamma)), \end{aligned} \tag{8.17}$$

$$\text{where } \mathcal{U}_1(\Phi-\tilde\gamma) = (x_3\partial_{x_3} - x_1\partial_{x_1} - x_2\partial_{x_2} - \sum_{j=1}^n Y_j\partial_{Y_j})(\Phi-\tilde\gamma).$$

In these coordinates, $\rho_L = x_1$ and $\rho_R = x_2$ and so $\tilde\gamma = \mu_R\log x_2 + \mu_L\log x_1$, where $\mu_R = \mu(y')$ and $\mu_L = \mu(y_1'+u, y'+uY)$, where $Z = (Y_2,\dots Y_n)$. Since $\sigma^2\kappa_L^2\mu_L^2 = \sigma^2 - \frac{h^2n^2}{4}(\kappa_L^2-\kappa_0^2)$, the first three terms in (8.17) give

$$\sigma^2\kappa_L^2{x_1}^2(\partial_{x_1}(\Phi-\tilde\gamma))^2 - \sigma^2 + \frac{h^2n^2}{4}(\kappa_L^2-\kappa_0^2) = \sigma^2\kappa_L^2{x_1}^2(\partial_{x_1}\Phi - {x_1}^{-1}\mu_L)^2 - \sigma^2 + \frac{h^2n^2}{4}(\kappa_L^2-\kappa_0^2) =$$

$$\sigma^2\kappa_L^2({x_1}^2(\partial_{x_1}\Phi)^2 - 2x_1\partial_{x_1}\Phi\mu_L + \mu_L^2) - \sigma^2 + \frac{h^2n^2}{4}(\kappa_L^2-\kappa_0^2) = \sigma^2\kappa_L^2({x_1}^2(\partial_{x_1}\Phi)^2 - 2\mu_L x_1\partial_{x_1}\Phi),$$

and hence if $x = (x_1,x_2,x_3)$,

$$\begin{aligned} C_0(h,\sigma,x,u,Y,\theta) = \sigma^2\kappa_L^2({x_1}^2(\partial_{x_1}\Phi)^2 - 2\mu_L x_1\partial_{x_1}\Phi) + 2\sigma^2{x_1}^2\sum_{j=2}^n H^{1j}(\mathcal{U}_1(\Phi-\tilde\gamma))(\partial_{Y_j}(\Phi-\tilde\gamma)+ \\ \sigma^2{x_1}^2\sum_{j,k=2}^n H^{jk}(\partial_{Y_j}(\Phi-\tilde\gamma))(\partial_{Y_k}(\Phi-\tilde\gamma)). \end{aligned}$$

Then we use (3.6) and (3.9) to write

$$\begin{aligned} C_0(h,\sigma,x,u,Y,\theta) = \sigma^2\kappa_L^2({x_1}^2(\partial_{x_1}\Phi)^2 - 2\frac{1}{\kappa_L}x_1\partial_{x_1}\Phi - 2h^2\nu_L x_1\partial_{x_1}\Phi)+ \\ 2\sigma^2{x_1}^2\sum_{j=2}^n H^{1j}(\mathcal{U}_1(\Phi-\gamma+h^2\beta))(\partial_{Y_j}(\Phi-\gamma+h^2\beta)+ \\ \sigma^2{x_1}^2\sum_{j,k=2}^n H^{jk}(\partial_{Y_j}(\Phi-\gamma+h^2\beta))(\partial_{Y_k}(\Phi-\gamma+h^2\beta)), \end{aligned}$$

and hence we obtain

$$\begin{aligned} C_0(h,\sigma,x,u,Y,\theta) = \sigma^2\kappa_L^2({x_1}^2(\partial_{x_1}\Phi)^2 - 2\frac{1}{\kappa_L}x_1\partial_{x_1}\Phi) + 2\sigma^2{x_1}^2\sum_{j=2}^n H^{1j}(\mathcal{U}_1(\Phi-\gamma))(\partial_{Y_j}(\Phi-\gamma)+ \\ \sigma^2{x_1}^2\sum_{j,k=2}^n H^{jk}(\partial_{Y_j}(\Phi-\gamma))(\partial_{Y_k}(\Phi-\gamma)) - 2h^2\sigma^2\kappa_L^2\nu_L x_1\partial_{x_1}\Phi+ \\ 2h^2\sigma^2{x_1}^2\sum_{j=1}^n H^{1j}(\mathcal{U}_1(\Phi-\gamma))(\partial_{Y_j}\beta) + 2h^2\sigma^2{x_1}^2\sum_{j=1}^n H^{1j}(\partial_{Y_j}(\Phi-\gamma))(\mathcal{U}_1\beta)+ \\ 2h^2\sigma^2{x_1}^2\sum_{j,k=1}^n H^{jk}(\partial_{Y_j}(\Phi-\gamma))(\partial_{Y_k}\beta) + 2h^4\sigma^2\omega^2\sum_{j=1}^n \mathcal{U}_1\beta\partial_{Y_j}\beta + 2h^4\sigma^2\omega^2\sum_{j,k=2}^n \partial_{Y_j}\beta\partial_{Y_k}\beta. \end{aligned} \tag{8.18}$$

Recall that $p = |\zeta|^2_{g^*} - 1 = 0$ on Λ and since $\Phi - \gamma$ parametrizes $\beta_0^*\Lambda$, it follows that

$$\sum_{jk} a_{jk}\partial_j(\Phi-\gamma)\partial_k(\Phi-\gamma) = 1,$$

and so in coordinates (6.24), this equation gives

$$\kappa_L^2 {x_1}^2(\partial_{x_1}(\Phi-\gamma))^2 - 1 + {x_1}^2 H^{11}(\mathcal{U}_1(\Phi-\gamma))^2 +$$
$$2{x_1}^2\sum_{j=1}^n H^{1j}(\mathcal{U}_1(\Phi-\gamma))(\partial_{Y_j}(\Phi-\gamma)) + x_1^2\sum_{j,k=1}^n H^{jk}(\partial_{Y_j}(\Phi-\gamma))(\partial_{Y_k}(\Phi-\gamma)) = 0,$$

and since $\kappa_L^2 {x_1}^2(\partial_{x_1}\gamma)^2 = 1$, it follows that

$$\kappa_L^2({x_1}^2(\partial_{x_1}\Phi)^2 - 2x_1\frac{1}{\kappa_L}\partial_{x_1}\Phi) + {x_1}^2 H^{1,1}(\mathcal{U}_1(\Phi-\gamma))^2 + 2{x_1}^2\sum_{j=1}^n H^{1j}(\mathcal{U}_1(\Phi-\gamma))(\partial_{Y_j}(\Phi-\gamma)+$$
$$(8.19)\qquad {x_1}^2\sum_{j,k=1}^n H^{jk}(\partial_{Y_j}(\Phi-\gamma))(\partial_{Y_k}(\Phi-\gamma)) = 0.$$

Therefore, substituting (8.19) in (8.18), and using that $\sigma = 1 + h\sigma'$, we deduce that

$$C_0(h,\sigma,x,u,Y,\theta) = h^2\widetilde{C}_0(h,\sigma,x,u,Y,\theta), \text{ where}$$
$$\widetilde{C}_0(h,\sigma,x,u,Y,\theta) = -2\sigma^2\kappa_L^2\nu_L x_1\partial_{x_1}\Phi + 2\sigma^2{x_1}^2\sum_{j=1}^n H^{1j}(\mathcal{U}_1(\Phi-\gamma))(\partial_{Y_j}\beta)+$$
$$2\sigma^2{x_1}^2\sum_{j=1}^n H^{1j}(\partial_{Y_j}(\Phi-\gamma))(\mathcal{U}_1\beta) + 2\sigma^2{x_1}^2\sum_{j,k=1}^n H^{jk}(\partial_{Y_j}(\Phi-\gamma))(\partial_{Y_k}\beta)+$$
$$2h^2\sigma^2x_1^2\sum_{j=1}^n \mathcal{U}_1\beta\partial_{Y_j}\beta + 2h^2\sigma^2x_1^2\sum_{j,k=2}^n \partial_{Y_j}\beta\partial_{Y_k}\beta.$$

Since $\Phi \in \mathcal{K}^{0,0}_{ph}(X\times_0 X)$, and $x_1\partial_{x_1}\beta, x_1\partial_u\beta, x_1\partial_{Y_j}\beta \in \mathcal{K}^{0,0}_{ph}(X\times_0 X)$ and $x_1\partial_{x_1}\tilde{\gamma}, x_1\partial_u\tilde{\gamma}, x_1\partial_{Y_j}\tilde{\gamma} \in \mathcal{K}^{0,0}_{ph}(X\times_0 X)$, and $\sigma = 1 + h\sigma'$, if follows that from the definition of β in (3.9) and (3.6) that

$$\widetilde{C}_0(h,\sigma,x,u,Y,\theta) \sim \sum_{j=0}^\infty h^j C_{0,j}(\sigma',x,u,Y,\theta), \text{ such that}$$
$$(8.20)\qquad C_{0,j}(\sigma',x,u,Y,\theta) \sim \sum_{l=1}^\infty\sum_{k=0}^l x_1^l(\log x_1)^k C_{0,j,k,l}(x_2,x_3,u,Y,\theta),$$

Now we return to (8.13). We use (3.9), (8.20) and the fact that $\sigma = 1 + h\sigma'$, $\sigma' \in (-c,c)\times i(-C,C)$, to conclude that

$$Q_{L,\Phi,\tilde{\gamma}}(h,\sigma,D) \sim h^2 Q_{0,L}(h,\sigma',D) + h(W+\vartheta), \text{ where}$$
$$Q_{0,L}(h,\sigma',D) = \sum_{jk} a_{jk}D_jD_k + i\sum_j b_jD_j + \sigma'(W+\vartheta)+$$
$$h\sigma\sum_{jk} a_{jk}(2\partial_k\beta D_j - i\partial_j\partial_k\beta) + ih\sigma\sum_j b_j\partial_j\beta + \widetilde{C}_0(h,\sigma),$$
$$(8.21)\qquad W = -2i\sum_j(\sum_k a_{jk}\partial_k(\Phi-\gamma))\partial_j,$$
$$\vartheta(m,\theta) = -i\sum_{jk} a_{jk}\partial_j\partial_k(\Phi-\gamma) + i\sum_j b_j\partial_j(\Phi-\gamma).$$

Notice that the vector field W acting on functions of the base variable m satisfies

$$W\phi(m) = -iH_{q_{L,\gamma}}\phi(m). \tag{8.22}$$

Using the formula of the coefficients of $Q_L(h,\sigma,D)$ given by (8.16), the polyhomogeneity of Φ given by (6.59) and the definition of γ, we find that

$$\vartheta(m,\theta) = -ix_1\tilde{\vartheta}(m,\theta), \quad \tilde{\vartheta} \sim \sum_{j=0}^{\infty}\sum_{k=0}^{j} x_1^j(\log x_1)^k\tilde{\vartheta}_{j,k}(x_2,x_3,Y,\theta). \tag{8.23}$$

We deduce from (3.6), (3.9), (8.15) and (8.20) that

$$\begin{gathered} Q_{0,L}(h,\sigma',D) = Q_L + \sigma'(W+\vartheta) + \mathcal{W}(h,\sigma'), \\ \text{where } Q_L = \sum_{jk} a_{jk}D_jD_k + \sum_j ib_jD_j, \\ \mathcal{W}(h,\sigma) \sim \sum_{a=0}^{\infty} h^a\mathcal{W}_a(\sigma',m), \\ \mathcal{W}_a(\sigma',m,\theta) = \sum_j A_{a,j}(\sigma',m,\theta)\rho_L D_j + B_a(\sigma',m,\theta), \quad A_{a,j}, B_a \in \mathcal{K}_{ph}^{0,0}(X\times_0 X\times K). \end{gathered} \tag{8.24}$$

The coefficient of D_j in $\mathcal{W}_a(\sigma',m)$ is of the form $\rho_L A_{a,j}$ because it comes from $a_{jk}\partial_k\beta$, where a_{jk} is a coefficient of the principal part of Q_L and β is defined in (3.9). Since Q_L is given in terms of the lifts of the vector fields as (6.25), the coefficient a_{jk} vanishes to order two at $\{\rho_L = 0\}$, and hence the particular form of this coefficient.

By replacing this expression into the expansion (9.3), we obtain the first transport equation valid in local coordinates in $\mathcal{O}_j$:

$$(W+\vartheta)g_{2,0} = 0, \; g_{2,0} \in C^\infty(\{x_1 > \delta\}). \tag{8.25}$$

But according to (8.22), $W = -iH_{q_{L,\gamma}}$. Now recall that $Q_{L,\gamma}$ and $P_{L,\gamma}$ defined in (6.13), have the same semiclassical principal part, so $H_{q_{L,\gamma}} = H_{p_{L,\gamma}}$. But in the proof of Theorem 6.1, we defined $p_{L,\gamma} = 2\rho_L\wp_L$ (there we worked with $\frac{1}{2}(h^2\Delta - \sigma^2)$) and so $H_{q_L} = 2\rho_L H_{\wp_L} + 2\wp_L H_{\rho_L}$. Since $\wp_L = 0$ on Λ^* and G_1 is supported near Diag_0, and we conclude that near the left face (8.25) is equivalent to

$$(H_{\wp_L} + \frac{1}{2}\tilde{\vartheta})g_{2,0} = 0, \quad g_{2,0} \in C^\infty(\{\rho_L > \delta\}), \tag{8.26}$$

where $\tilde{\vartheta}$ satisfies the expansion in (8.23). If $\zeta(s)$ denotes an integral curve of $H_{\wp_L}$, then the solution to (8.26) with initial data at $x_1 = \delta$ satisfies

$$\frac{d}{dx_1}\left[\exp(-\frac{1}{2}\int_{x_1}^{\delta}\tilde{\vartheta}(\zeta(s)),\theta\, ds)g_{2,0}(\zeta(t),\theta)\right] = 0,$$

and so given a point $(x_1,Z) = (x_1,x_2,x_3,Y)$, let $\zeta(s)$ be the integral curve of $H_{\wp_L}$ joining (z_1,Z) to a point on the surface $\{x_1 = \delta\}$, then

$$g_{2,0}(x_1,Z,\theta) = g_{2,0}(\zeta(\delta),\theta)\exp(\int_{x_1}^{\delta}\frac{1}{2}\tilde{\vartheta}(\zeta(s),\theta)\, ds).$$

Now we use (6.18) to see that

$$\begin{gathered} \zeta_1(s) = s, \\ \zeta_r(s) \sim \zeta_{r,0} + \sum_{l=1}^{\infty}\sum_{k=0}^{l} s^l(\log s)^k X_{r,l,k}(\zeta_0). \end{gathered}$$

On the other hand, we deduce from (8.23) that

$$\tilde{\vartheta}(\zeta(s),\theta) \sim \sum_{l=0}^{\infty}\sum_{k=0}^{l} s^l(\log s)^k \tilde{\vartheta}_{l,k}(\zeta_2(s),\dots,\zeta_{2n+2}(s),\theta),\ \tilde{\vartheta}_{l,k}\in C^\infty.$$

But in view of Taylor's formula

$$\tilde{\vartheta}_{l,k}(\zeta_2(s),\dots,\zeta_{2n+2}(s),\theta) - \tilde{\vartheta}_{l,k}(\zeta_{2,0},\dots,\zeta_{2n+2,0},\theta) \sim \sum_{\alpha} C_\alpha(\zeta(s)-\zeta_0)^\alpha \sim \sum_{m=0}^{\infty}\sum_{r=0}^{m} s^m(\log s)^r \mathcal{B}_{m,r}(\zeta_0,\theta),$$

and therefore

$$\tilde{\vartheta}(\zeta(s),\theta) \sim \sum_{l=0}^{\infty}\sum_{k=0}^{l} s^l(\log s)^k \mathcal{A}_{l,k}(\zeta_0,\theta).$$

After integrating this expression and using Taylor's expansion of the exponential function, we find that

$$g_{2,0}(x_1,Z,\theta) \sim \sum_{l=0}^{\infty}\sum_{k=0}^{l} x_1^l(\log x_1)^k \mathcal{V}_{2,0,j,l,k}(Z,\theta). \tag{8.27}$$

Let $\beta_0^* K_{\widetilde{G}_{2,0}}$ be defined locally by (8.9) with $g_{2,0}$ satisfying (8.25). Then $K_{\widetilde{G}_{2,0}}$ satisfies (8.5).

The next step is to find $\widetilde{G}_{2,1}$ such that $e^{i\frac{\sigma}{\hbar}\tilde{\gamma}}\beta_0^* K_{\widetilde{G}_{2,1}} \in I^{\frac{1}{2}}_{ph}(X\times_0 X,\Lambda^*,\Omega^{\frac{1}{2}})$ and such that

$$Q(h,\sigma,D)\widetilde{G}_{2,0} - e^{i\frac{\sigma}{\hbar}r}F_{1,1}(h,\sigma) - \mathcal{E}_1(h,\sigma) = h\mathcal{E}_2(h,\sigma)\ \ \beta_0^* K_{\mathcal{E}_2} \in e^{-i\frac{\sigma}{\hbar}\tilde{\gamma}} I^{\frac{1}{2}}_{ph}(X\times_0 X,\Lambda^*,\Omega^{\frac{1}{2}}).$$

Again, if $e^{i\frac{\sigma}{\hbar}s}g_{2,1}$, $g_{2,1}\in S(\Lambda^*, M_{\Lambda^*}\otimes\Omega^{\frac{1}{2}}_{\Lambda^*})$, denotes the principal symbol of $e^{i\frac{\sigma}{\hbar}\tilde{\gamma}}\beta_0^* K_{G_{2,1}}$, and $e^{i\frac{\sigma}{\hbar}s}e_1$ denotes the principal symbol of $e^{i\frac{\sigma}{\hbar}\tilde{\gamma}}\beta_0^* K_{\mathcal{E}_1}$, and $e^{i\frac{\sigma}{\hbar}s}\widetilde{F}_{1,1}$ the symbol of $\widetilde{F}_{1,1}(h,\sigma)$, then in the interior $g_{2,1}$ it must satisfy

$$\frac{1}{i}\mathcal{L}_{H_{q_L}} g_{2,1} + q_L^s g_{2,1} = \widetilde{F}_{1,1} + e_1,\ \text{ on } \beta_0^*\Lambda \text{ and } g_{2,1}=0 \text{ on } \Lambda_0\times[0,h_0), \tag{8.28}$$

This equation can be solved without a problem in the interior, and the only issue is to determine the asymptotic behavior of $g_{2,1}$ at the left face. Again we work in local coordinates valid in an neighborhood $\mathcal{O}\subset X\times_0 X$ of a point $m_0\in L$ and since $\widetilde{F}_{1,1}$ is equal to zero near the left face, we arrive at the second transport equation valid in a neighborhood $\mathcal{O}_j$,

$$(H_{\wp_L} + \frac{1}{2}\tilde{\vartheta})g_{2,1} = \frac{1}{\rho_L}e_1,\ \ g_{2,1}\in C^\infty(\{\rho_L>\delta\}). \tag{8.29}$$

But the error e_1 is obtained by applying the operator $Q_{L,0}$ and the vector field $\mathcal{W}_1$, defined in (8.24) to $g_{2,0}$. Since $g_{2,0}$ is polyhomogeneous, it follows that

$$\frac{1}{\rho_L}e_1 \sim \sum_{j=0}^{\infty}\sum_{k=0}^{j+1}\rho_L^j(\log\rho_L)^k e_{1,j,k}. \tag{8.30}$$

If $\zeta(s)$ is as above, then the solution of (8.29) is given by

$$g_{2,1}(x_1,Z,\theta) = \exp(\frac{1}{2}\int_{x_1}^{\delta}\tilde{\vartheta}(\zeta(s),\theta)\,ds)\int_{x_1}^{\delta}\left[\frac{1}{s}e_1(\zeta(s),\theta)\exp(-\frac{1}{2}\int_s^{\delta}\tilde{\vartheta}(\zeta(s_1),\theta)\,ds_1)\right]ds.$$

But we deduce from (8.30) that

$$\frac{1}{s}e_1(\zeta(s),\theta)\exp(-\frac{1}{2}\int_s^{\delta}\tilde{\vartheta}(\zeta(s_1))\,ds_1) \sim \sum_{j=0}^{\infty}\sum_{k=0}^{j+1} s^j(\log s)^k \mathcal{Z}_{r,j,k}(\zeta_0,\theta).$$

Integrating this, using (6.38) and combining with the expansion of $\exp(\int_{x_1}^{\delta} \tilde{\vartheta}(\zeta(s))\, ds)$ that we already discussed, we find that $g_{1,0}(x_1, Z, \theta)$ has a polyhomogeneous expansion at $\{\rho_L = 0\}$. In general, we construct a sequence of operators $\widetilde{G}_{2,k}$, $k \in \mathbb{N}$, such that $e^{i\frac{\sigma}{\hbar}\tilde{\gamma}}\beta_0^* K_{\widetilde{G}_{2,k}} \in I_{ph}^{\frac{1}{2}}(X \times_0 X, \Lambda^*, \Omega^{\frac{1}{2}})$ and such that

$$Q(h,\sigma,D)\widetilde{G}_{2,k} - e^{i\frac{\sigma}{\hbar}r}F_{1,k}(h,\sigma) - \mathcal{E}_{k-1}(h,\sigma) = h\mathcal{E}_k(h,\sigma) \;\; \beta_0^* K_{\mathcal{E}_k} \in e^{-i\frac{\sigma}{\hbar}\tilde{\gamma}} I_{ph}^{\frac{1}{2}}(X \times_0 X, \Lambda^*, \Omega^{\frac{1}{2}}).$$

By construction, the operator defined by

$$G_2(h,\sigma) \sim \sum_{k=0}^{\infty} h^k x^{\frac{n}{2}} \widetilde{G}_{2,k},$$

whose symbol is given by the Borel sum of the symbols of $\widetilde{G}_{2,k}$, satisfies (8.2). This ends the proof of Lemma 8.1 □

9. The case of geodesically convex CCM

As an example, we show how the construction in the previous section applies in the very special case when $(\mathring{X}, g)$ is a geodesically convex CCM. As we have shown in Theorem 6.4, in this particular case the underlying Lagrangian submanifold $\Lambda^* \setminus \widetilde{\Lambda}_0$ is globally parametrized by a phase function $\mathcal{R}$, and we only need to introduce very simple semiclassical Lagrangian distributions to construct the parametrix.

Lemma 9.1. *Let $(\mathring{X}, g)$ be a geodesically convex CCM, and let $r : \mathring{X} \times \mathring{X} \longmapsto [0, \infty)$ denote the distance function between two points of $\mathring{X}$, let $F_1(h,\sigma)$ be as in* (8.1) *and let $h_0 > 0$ satisfy* (3.5)*. Then there are operators $G_2(h,\sigma)$ and $E_2(h,\sigma)$ with Schwartz kernels K_{G_2} and K_{E_2} such that $\beta_0^* K_{G_2} = e^{i\frac{\sigma}{\hbar}\beta_0^* r} e^{ih\sigma\beta} U_2(h,\sigma)\beta_0^* |dg(z')|^{\frac{1}{2}}$ and $\beta_0^* K_{E_2} = e^{i\frac{\sigma}{\hbar}\beta_0^* r} e^{ih\sigma\beta} F_2(h,\sigma)\beta_0^* |dg(z')|^{\frac{1}{2}}$, U_2, F_2, holomorphic in $\sigma \in \Omega_\hbar$, with $h \in (0, h_0)$, where β is defined in* (3.9)*, and*

$$U_2(h,\sigma) \in h^{-\frac{n}{2}-1}\mathcal{K}_{ph}^{\frac{n}{2},\frac{n}{2}}(X \times_0 X \times [0,h_0)), \text{ vanishing to infinite order at } \mathrm{Diag}_0 \times [0,h_0)$$
$$F_2(h,\sigma) \in h^{\infty}\mathcal{K}_{ph}^{\frac{n}{2},\frac{n}{2}}(X \times_0 X \times [0,h_0)),$$

such that

$$(h^2(\Delta_{g(z)} - \frac{\kappa_0 n^2}{4}) - \sigma^2)G_2(h,\sigma) - e^{i\frac{\sigma}{\hbar}r}F_1(h,\sigma) = E_2(h,\sigma). \tag{9.1}$$

Proof. Since $\beta_\hbar^* K_{F_1}$ vanishes to infinite order at $\mathcal{S}$, it follows that $\beta_0^* K_{F_1} \in h^{-\frac{n}{2}} C^\infty(X \times_0 X \times [0,1))$ is supported near $\mathrm{Diag}_0 \times [0,1)$ and vanishes to infinite order at $\mathrm{Diag}_0 \times [0,1)$, so it follows that $\beta_0^* K_{F_1}$ has an asymptotic expansion at $\{h = 0\}$ of the form

$$\beta_0^* K_{F_1} \sim h^{-\frac{n}{2}} \sum_{j=0}^{\infty} h^j F_{1,j}(\sigma', m), \; \sigma = 1 + h\sigma', \; m \in X \times_0 X$$

with $F_{1,j} \in C^\infty(X \times_0 X)$ supported near Diag_0 but vanishing to infinite order at Diag_0. We will find $U_2(h,\sigma)$ such that

$$U_2(h,\sigma) \sim h^{-\frac{n}{2}-1} \sum_{j=0}^{\infty} h^j U_{2,j}(\sigma', m), \; \sigma = 1 + h\sigma',$$

$$U_{2,j} \in \mathcal{K}_{ph}^{\frac{n}{2},\frac{n}{2}}(X \times_0 X) \text{ vanishes to infinite order at } \mathrm{Diag}_0, \text{ and} \tag{9.2}$$
$$\beta_0^*(P(h,\sigma,D))e^{i\frac{\sigma}{\hbar}\beta_0^* r} e^{ih\sigma\beta} U_2(h,\sigma) - e^{i\frac{\sigma}{\hbar}\beta_0^* r} e^{ih\sigma\beta}\beta_0^* F_1(h,\sigma) = e^{i\frac{\sigma}{\hbar}\beta_0^* r} e^{ih\sigma\beta} F_2(h,\sigma),$$
$$\text{with } F_2(h,\sigma) \in h^{\infty}\mathcal{K}_{ph}^{\frac{n}{2},\frac{n}{2}}(X \times_0 X \times [0,h_0)).$$

We have chosen ρ_R and ρ_L such that $\rho_R = \rho_L = 1$ on the support of F_1. In this case $\gamma = \tilde{\gamma} = 0$ on the support of F_1, where $\tilde{\gamma}$ and γ were defined in (3.7) and (3.9) respectively, and since $h^2\beta = \gamma - \tilde{\gamma}$, $e^{i\frac{\sigma}{\hbar}\beta_0^* r}F_1 = e^{i\frac{\sigma}{\hbar}\beta_0^* r} e^{ih\sigma\beta} F_1$. Perhaps one would have tried an expansion of the form $\beta_0^* K_{G_2} = e^{-i\frac{\sigma}{\hbar}\beta_0^* r} U_2(h,\sigma)$, as in

[52], however if this were the case, then in view of (3.8), $U_2(h,\sigma)$ would need to have a polyhomogeneous expansion at the left and right faces involving variable powers of $\rho_\bullet$, and this would lead to very complicated transport equations, and it would not be in the class $\mathcal{K}_{ph}^{\frac{n}{2},\frac{n}{2}}(X\times_0 X)$.

If $U_{2,m}=x^{-\frac{n}{2}}V_m$ and $F_{1,j}=x^{-\frac{n}{2}}\widetilde{F}_j$, then we are reduced to finding V_j, such that

$$\begin{gathered} Q_{L,\mathcal{R},\tilde{\gamma}}(h,\sigma,D)h^{-\frac{n}{2}-1}\sum_{j=0}^{\infty}h^jV_j\sim h^{-\frac{n}{2}}\sum_{j=0}^{\infty}h^j\widetilde{F}_j,\\ \text{where } Q_{L,\mathcal{R},\tilde{\gamma}}(h,\sigma,D)=e^{-i\frac{\sigma}{h}\mathcal{R}}Q_{L,\tilde{\gamma}}e^{i\frac{\sigma}{h}\mathcal{R}}=e^{-i\frac{\sigma}{h}(\mathcal{R}-\tilde{\gamma})}Q_Le^{i\frac{\sigma}{h}(\mathcal{R}-\tilde{\gamma})}\end{gathered}\tag{9.3}$$

We arrive at the same transport equations as in the previous section. In the interior these equations are invariantly given in terms of the Lie derivative with respect to $H_{q,\gamma}$, while near the left face the equations are given in local coordinates by (8.29) where $\mathcal{R}$ plays the role of $\Phi(m,\theta)$. □

So far we have constructed an operator $\widetilde{G}_2(h,\sigma)=G_0(h,\sigma)+G_1(h,\sigma)+G_2(h,\sigma)$, such that

$$P(h,\sigma,D)\widetilde{G}_2(h,\sigma)-\mathrm{Id}=E_2(h,\sigma),\quad \beta_0^*K_{E_2(h,\sigma)}=e^{i\frac{\sigma}{h}(\mathcal{R}-\tilde{\gamma})}F_2(h,\sigma),\quad F_2\in h^\infty\mathcal{K}_{ph}^{\frac{n}{2},\frac{n}{2}}(X\times_0 X).\tag{9.4}$$

10. The fourth step of the proof: the construction of $G_3(h,\sigma)$

The fourth step is to remove the error at the front face $\mathcal{F}$. Before we proceed we need the following

Lemma 10.1. *Let $\mathcal{R}\in\mathcal{K}_{ph}^{0,0}(X\times_0 X)$ and let $f(h,m)\in h^\infty\mathcal{K}_{ph}^{0,0}(X\times_0 X)$. Then*

$$f(h,m)e^{i\frac{\sigma}{h}\mathcal{R}}\in h^\infty\mathcal{K}_{ph}^{0,0}(X\times_0 X).\tag{10.1}$$

Proof. Since $\mathcal{R}$ is polyhomogeneous with respect to R and L, then according to (2.7) in local coordinates $x=(x_1,x_2,x')$, where $L=\{x_1=0\}$, $R=\{x_2=0\}$,

$$\mathcal{R}(x_1,x_2,x')-\mathcal{R}(0,0,x')\sim\sum_{j_1,j_2=1}^{\infty}\sum_{k_1=0}^{j_1}\sum_{k_2=0}^{j_2}x_1^{j_1}x_2^{j_2}(\log x_1)^{k_1}(\log x_2)^{k_2}\mathcal{R}_{j_1,j_1,k_1,k_2}(x'),$$

but then by Taylor's formula, for any $\delta>0$,

$$\begin{gathered} h^{N+1}\left|e^{i\frac{\sigma}{h}\mathcal{R}(x_1,x_2,x')}-e^{i\frac{\sigma}{h}\mathcal{R}(0,0,x')}-\sum_{j=0}^{N}\frac{1}{j!}\left(i\frac{\sigma}{h}\left(\mathcal{R}(x_1,x_2,x')-\mathcal{R}(0,0,x')\right)\right)^j\right|\leq\\ C(N)h^{N+1}|\frac{\sigma}{h}\left(\mathcal{R}(x_1,x_2,x')-\mathcal{R}(0,0,x')\right)|^{N+1}\leq C(N,\delta)|x|^{N-\delta},\end{gathered}$$

and therefore $f(h,m)e^{i\frac{\sigma}{h}\mathcal{R}}\in h^\infty\mathcal{K}_{ph}^{0,0}(X\times_0 X\times[0,h_0))$, which proves the Lemma. □

According to Lemma 8.1, the error $E_2(h,\sigma)$ given in (8.2) is such that locally,

$$\beta_0^*K_{E_2(h,\sigma)}=h^\infty\int_{\mathbb{R}^N}e^{i\frac{\sigma}{h}(\Phi(m,\theta)-\tilde{\gamma})}F_2(m,\theta)\,d\theta,\ F_2\in\mathcal{K}_{ph}^{\frac{n}{2},\frac{n}{2}}(X\times_0 X\times[0,h_0)),$$

but Lemma 10.1 implies that in fact

$$\beta_0^*K_{E_2(h,\sigma)}=h^\infty e^{-i\frac{\sigma}{h}\tilde{\gamma}}\tilde{F}_2(h,\sigma),\ \tilde{F}_2\in\mathcal{K}_{ph}^{\frac{n}{2},\frac{n}{2}}(X\times_0 X\times[0,h_0))$$

Lemma 10.2. *Let $E_2(h,\sigma)$, $h\in(0,h_0)$, holomorphic in $\sigma\in\Omega_\hbar$, be such that*

$$\beta_0^*K_{E_2(h,\sigma)}=h^\infty e^{-i\frac{\sigma}{h}\tilde{\gamma}}F_2(h,\sigma),\ F_2\in\mathcal{K}_{ph}^{\frac{n}{2},\frac{n}{2}}(X\times_0 X\times[0,h_0)),$$

and here we may ignore half-densities. Then there exists an operator $G_3(h,\sigma)$, such that

$$\beta_0^*K_{G_3(h,\sigma)}=e^{-i\frac{\sigma}{h}\tilde{\gamma}}U_3(h,\sigma),\quad U_3(h,\sigma)\in h^\infty\mathcal{K}_{ph}^{\frac{n}{2},\frac{n}{2}}(X\times_0 X\times[0,h_0)),$$

and such that

$$
\begin{aligned}
(h^2(\Delta_{g(z)} - \frac{\kappa_0 n^2}{4}) - \sigma^2)G_3(h,\sigma) - E_2(h,\sigma) = E_3(h,\sigma),\\
\beta_0^* K_{E_3(h,\sigma)} = e^{-i\frac{\sigma}{h}\tilde{\gamma}} F_3(h,\sigma),\\
F_3(h,\sigma) \in \rho_{\mathrm{ff}}^{\infty} h^{\infty} \mathcal{K}_{ph}^{\frac{n}{2},\frac{n}{2}}(X \times_0 X \times [0,h_0)).
\end{aligned}
\tag{10.2}
$$

Proof. The goal is to remove the error at the front face. Since multiplication by h commutes with $P(h,\sigma,D)$, the terms found at each step of the proof will also vanish to infinite order at $h=0$, and after Borel summing, the final term will also vanish to infinite order at $h=0$. So we will ignore h at each step of the proof. We use an argument from [6] which is a polyhomogeneous version of an argument of [43]. Since F_2 is smooth at ff, we can write its Taylor series at $\{\rho_{\mathrm{ff}}=0\}$:

$$
F_2 \sim \sum_{j=1}^{\infty} \rho_{\mathrm{ff}}^j F_{2,j}, \text{ where } F_{2,j} \in \mathcal{K}_{ph}^{\frac{n}{2},\frac{n}{2}}(\mathrm{ff} \times [0,1)),
$$

where $\mathcal{K}_{ph}^{\frac{n}{2},\frac{n}{2}}(\mathrm{ff}\times[0,1))$ is the space of functions defined on $\mathrm{ff}\times[0,1)$ which have polyhomogeneous expansions at the right and left face. Our goal is to find

$$
\begin{gathered}
U_3 \sim \sum_{j=1}^{\infty} \rho_{\mathrm{ff}}^j U_{3,j}, \quad U_{3,j} \in \mathcal{K}_{ph}^{\frac{n}{2},\frac{n}{2}}(\mathrm{ff} \times [0,h_0)) \text{ such that}\\
\beta_0^*(P(h,\sigma,D))e^{-i\frac{\sigma}{h}\tilde{\gamma}}U_3 - e^{-i\frac{\sigma}{h}\tilde{\gamma}}\beta_0^* K_{F_2} = e^{-i\frac{\sigma}{h}\tilde{\gamma}}F_3, \quad F_3 \in \rho_{\mathrm{S}}^{\infty}\rho_{\mathrm{ff}}^{\infty}\mathcal{K}^{\frac{n}{2},\frac{n}{2}}(X \times_0 X \times [0,h_0)).
\end{gathered}
$$

We recall that the normal operator introduced in [43] and also used in [6] is defined as

$$
\mathcal{N}(D) = \beta_0^* P(h,\sigma,D)|_{\mathrm{ff}},
$$

notice that for example in coordinates (6.24), $\kappa_L = \kappa(y' + uZ)$, and $\rho_{\mathrm{ff}} = u$, so $\kappa_L|_{\mathrm{ff}} = \kappa(y')$, but the variables y' serve as parameters for the operator $\beta_0^* P(h,\sigma,D)$, So, as observed in [6, 43], it follows that,

$$
\begin{gathered}
\mathcal{N}(h,\sigma,D) = h^2(\Delta_{g_0} - \frac{\kappa_0 n^2}{4}) - \sigma^2, \text{ where}\\
g_0 \text{ is the metric on the hyperbolic space } g_0 = \frac{dx^2}{\kappa^2(y')x^2} + \frac{dy^2}{x^2}.
\end{gathered}
$$

So the first step is to solve

$$
\mathcal{N}(h,\sigma,D)\widetilde{U}_{3,0} = F_0,
$$

and here one needs to establish the mapping property of $\mathcal{N}(h,\sigma,D)^{-1}$ given by

$$
\begin{gathered}
\mathcal{N}(h,\sigma,D)^{-1} : e^{-i\frac{\sigma}{h}\tilde{\gamma}}\mathcal{K}_{ph}^{\frac{n}{2},\frac{n}{2}}(\mathrm{ff} \times [0,1)) \longmapsto e^{-i\frac{\sigma}{h}\tilde{\gamma}}\mathcal{K}_{ph}^{\frac{n}{2},\frac{n}{2}}(\mathrm{ff} \times [0,1)),\\
\text{where } \mu = \frac{1}{\kappa(y')}\sqrt{1 - \frac{h^2 n^2}{4\sigma^2}(\kappa(y')^2 - \kappa_0^2)}, \text{ is constant on the fiber of ff over } (x',y'),
\end{gathered}
\tag{10.3}
$$

holomorphically in $\sigma \in \Omega_{\hbar}$. This was done in Proposition 4.2 of [6]. Now extend $U_{3,0}$ to a function in $W_{3,0} \in \mathcal{K}^{\frac{n}{2},\frac{n}{2}}(X \times_0 X \times [0,h_0))$, and so

$$
\beta_0^*(P(h,\sigma,D))e^{-i\frac{\sigma}{h}\tilde{\gamma}}W_{3,0} - e^{-i\frac{\sigma}{h}\tilde{\gamma}}\beta_0^* K_{F_2} = \rho_{\mathrm{ff}} e^{-i\frac{\sigma}{h}\tilde{\gamma}}\mathcal{E}_2, \quad \mathcal{E}_2 \in \mathcal{K}^{\frac{n}{2},\frac{n}{2}}(X \times_0 X \times [0,h_2)).
$$

Next we want to find $U_{3,1}$ such that

$$
\mathcal{N}(h,\sigma,D)U_{3,1} = F_{2,1} + \mathcal{E}_2|_{\rho_{\mathrm{ff}}=0}.
$$

Again, we use (10.3) to guarantee that this can be solved, and the solution is in he right space. By induction we construct $U_{3,j}$, $j=0,1,\ldots$, and by taking the Borel summation we find $G_3(h,\sigma)$ as desired. □

11. The fifth step of the proof: the construction of $G_4(h,\sigma)$

The fifth and final step consists of removing the error at the left face. Again, this is based on the construction of Mazzeo and Melrose [43]. Recall that so far, using Lemmas 5.1, 5.2, 9.1 and 10.2, we have constructed an operator $\widetilde{G}(h,\sigma) = G_0(h,\sigma) + G_1(h,\sigma) + G_2(h,\sigma) + G_3(h,\sigma)$ such that

$$P(h,\sigma,D)\widetilde{G}(h,\sigma) - \mathrm{Id} = E_3(h,\sigma), \quad \beta_0^* K_{E_3(h,\sigma)} = \rho_L^{\frac{n}{2}-i\frac{\sigma}{h}\mu_L}\rho_R^{\frac{n}{2}-i\frac{\sigma}{h}\mu_R}F,$$
$$F \in h^\infty \rho_{\mathrm{ff}}^\infty \mathcal{K}_{ph}^{0,0}(X \times_0 X \times [0,h_0)).$$

Also recall that $G_0(h,\sigma)$ and $G_1(h,\sigma)$ are supported away from the left and right faces, and that

$$\beta_0^*(G_2(h,\sigma) + G_3(h,\sigma)) = e^{-i\frac{\sigma}{h}\tilde{\gamma}}\rho_R^{\frac{n}{2}}\rho_L^{\frac{n}{2}}\mathcal{H} = \rho_R^{\frac{n}{2}-i\frac{\sigma}{h}\mu_R}\rho_L^{\frac{n}{2}-i\frac{\sigma}{h}\mu_L}\mathcal{H}, \quad \mathcal{H} \in \mathcal{K}_{ph}^{0,0}(X \times_0 X \times [0,h_0)),$$

and here we are not concerned with the structure of $\mathcal{H}$. But the whole point about introducing μ_R and μ_L is that $\frac{n}{2} - i\frac{\sigma}{h}\mu_L$ is an indicial root of $\beta_0^* P(h,\sigma,D)$, which one can verify using local projective coordinates valid near the left face. This implies that

$$\beta_0^* P(h,\sigma,D)\rho_L^{\frac{n}{2}-i\frac{\sigma}{h}\mu_L}\rho_R^{\frac{n}{2}-i\frac{\sigma}{h}\mu_R}\mathcal{H} = \rho_L^{\frac{n}{2}-i\frac{\sigma}{h}\mu_L+1}\rho_R^{\frac{n}{2}-i\frac{\sigma}{h}\mu_R}\widetilde{\mathcal{H}},$$

and so the error $E_3(h,\sigma)$ in fact satisfies

$$\beta_0^* K_{E_3(h,\sigma)} = \rho_L^{\frac{n}{2}-i\frac{\sigma}{h}\mu_L+1}\rho_R^{\frac{n}{2}-i\frac{\sigma}{h}\mu_R}F, \quad F \in h^\infty \rho_{\mathrm{ff}}^\infty \mathcal{K}_{ph}^{0,0}(X \times_0 X \times [0,h_0)),$$

and since $x = \rho_L\rho_{\mathrm{ff}}$, $x' = \rho_{\mathrm{ff}}\rho_R$, this implies that the kernel of $E_3(h,\sigma)$ satisfies

$$K_{E_3(h,\sigma)} = x^{\frac{n}{2}-i\frac{\sigma}{h}\mu(y)+1}x'^{\frac{n}{2}-i\frac{\sigma}{h}\mu(y')}Z(x,y,x',y'), \quad Z \in h^\infty \mathcal{K}^{0,0}(X \times X \times [0,h_0)),$$

$\mathcal{K}_{ph}^{0,0}(X \times X \times [0,1))$ denotes the space of functions smooth in $\mathring{X} \times \mathring{X} \times [0,\infty)$ with polyhomogeneous expansion at $\{x=0\} \cup \{x'=0\}$. So we need to prove

Lemma 11.1. *Given $E_3(h,\sigma)$ be such that $K_{E_3(h,\sigma)} = x^{\frac{n}{2}-i\frac{\sigma}{h}\mu(y)+1}x'^{\frac{n}{2}-i\frac{\sigma}{h}\mu(y')}Z(h,x,y,x',y')$, where $Z \in h^\infty\mathcal{K}^{0,0}(X \times X \times [0,h_0))$, there exists*

$$G_4(x,y,x',y') \sim x^{\frac{n}{2}-i\frac{\sigma}{h}\mu(y)+1}x'^{\frac{n}{2}-i\frac{\sigma}{h}\mu(y')}(W_0(y,x',y') + \sum_{j=0}^\infty\sum_{k=0}^j x^j(\log x)^k W_j(y,x',y'),$$

with $W_j(y,x',y')$ polyhomogeneous in x' and vanishing to infinite order at $h=0$, such that

$$P(h,\sigma,D)G_4(h,\sigma) - E_3(h,\sigma) = E_4(h,\sigma) \in h^\infty x^\infty x'^{\frac{n}{2}-i\mu(y')}\mathcal{K}^{0,0}(X \times X \times [0,h_0)). \tag{11.1}$$

Proof. Since $P(h,\sigma,D)$ does not depend on (x',y') and h commutes with $P(h,\sigma,D)$, we treat these as parameters and do not take them into account in the computations. So we have

$$E_3(h,\sigma) \sim x^{\alpha(y)}E_{3,0}(y) + x^{\alpha(y)}\sum_{j=1}^\infty\sum_{k=0}^j x^j(\log x)^k E_{3,j}(y), \quad \alpha = \frac{n}{2} - i\frac{\sigma}{h}\mu(y) + 1,$$

and we want

$$G_4(h,\sigma) \sim x^{\alpha(y)}G_{4,0}(y) + x^{\alpha(y)}\sum_{j=1}^\infty\sum_{k=0}^j x^j(\log x)^k G_{4,j}(y)$$

such that (11.1) holds. We substitute these expressions in the left side of (11.1) and match the coefficients. Recall that $P(h,\sigma,D)$ is given by

$$P(h,\sigma,D) =$$
$$-h^2\kappa^2(y)((x\partial_x)^2 - nx\partial_x - x^2F(x,y)\partial_x) - h^2x^2H^{jk}(x,y)\partial_{y_j}\partial_{y_k} + h^2x^2B_j(x,y)\partial_{y_j} - \frac{\kappa_0 n^2}{4} - \sigma^2$$

So the first term must satisfy

$$\left(-h^2\kappa^2(y)(\alpha^2-n\alpha)-\frac{\kappa_0 n^2}{4}-\sigma^2\right)G_{4,0}(y)=E_{3,0}(y),$$

and the key is that α is not an indicial root, so the coefficient on the left side is not equal to zero, and this equation can be solved.

Next we need to show that if $\beta=\frac{n}{2}-i\frac{\sigma}{h}\mu(y)+j$, $j\neq 0$, and $k\in\mathbb{N}_0$, then for any $E(y)$ there exists $G(y)$ such that

$$P(h,\sigma,D)x^\beta(\log x)^k G(y)-x^\beta(\log x)^k E(y)=\text{ less singular terms}$$

and we end up with the same equation as above with β in place of α, which can be solved because β is not an indicial root. This proves the Lemma. □

Then $G(h,\sigma)=G_0(h,\sigma)+G_{0,1}(h,\sigma)+G_2(h,\sigma)+G_3(h,\sigma)+G_4(h,\sigma)$ and satisfies

$$P(h,\sigma,D)G(h,\sigma,D)-\mathrm{Id}=E_4(h,\sigma)\text{ as in (11.1)}$$

is the desired parametrix.

Steps 1, 2, 4 and 5 of the construction work for any metric, even trapping ones. Step 3, the removal of the error on the semiclassical face, is the only one that is global and requires the non-trapping assumption.

12. The structure of the semiclassical resolvent

We will use Theorem 3.1 to describe the kernel of the semiclassical resolvent for non-trapping CCM. We recall from Theorem 3.1 that there exist operators $G(h,\sigma)$ and $E(h,\sigma)$ such that

$$P(h,\sigma,D)G(h,\sigma)=I+E(h,\sigma),$$

with $\beta_0^*K_{E(h,\sigma)}\in h^\infty\rho_{\mathrm{ff}}^\infty e^{-i\frac{\sigma}{h}\tilde{\gamma}}\mathcal{K}_{ph}^{\infty,\frac{n}{2}}(X\times_0 X\times[0,h))$, as in (3.15). Therefore,

$$E(h,\sigma):x^{-\frac{n}{2}+i\mu(\frac{\sigma}{h},y)}C^{-\infty}(X)\longrightarrow h^\infty\dot{C}^\infty(X), \tag{12.1}$$

where $C^{-\infty}(X)$ denotes the space of distributions supported on X and $\dot{C}^\infty(X)$ consists of the C^∞ functions on X which vanish to infinite order at ∂X. So, as an operator acting on weighted L^2 spaces, $E(h,\sigma)$ has small norm as $h\downarrow 0$. Then for h_0 small enough

$$R(h,\sigma)=\left(h^2(\Delta_g-\frac{\kappa_0 n^2}{4})-\sigma^2\right)^{-1}=G(h,\sigma)\left(I+E(h,\sigma)\right)^{-1},\quad h\in(0,h_0) \tag{12.2}$$

The main point is to show that

$$\begin{gathered}(I+E(h,\sigma))^{-1}=I+F(h,\sigma),\text{ with}\\ \beta_0^*K_{F(h,\sigma)}\in h^\infty\rho_{\mathrm{ff}}^\infty e^{-i\frac{\sigma}{h}\tilde{\gamma}}\mathcal{K}_{ph}^{\infty,\frac{n}{2}}(X\times_0 X\times[0,h)),\end{gathered} \tag{12.3}$$

and to prove this we use an argument from section 7 of [43]. The point is that this regularity is equivalent to the condition (12.1). To see this observe that, since

$$(I+E(h,\sigma))(I+F(h,\sigma))=(I+F(h,\sigma))(I+E(h,\sigma))=I,$$

it follows that

$$F(h,\sigma)=-E(h,\sigma)-E(h,\sigma)F(h,\sigma),\text{ and }F(h,\sigma)=-E(h,\sigma)-F(h,\sigma)E(h,\sigma).$$

The second identity states that $F(h,\sigma)$ maps $C^{-\infty}(X)$ into $L^2(X)$ and the first identity then shows that (12.3) holds. It then follows that the operator $\mathcal{E}(h,\sigma)=G(h,\sigma)F(h,\sigma)$ is well defined and

$$\beta_0^*K_{\mathcal{E}(h,\sigma)}\in h^\infty e^{-i\frac{\sigma}{h}\tilde{\gamma}}\mathcal{K}_{ph}^{\frac{n}{2},\frac{n}{2}}(X\times_0 X\times[0,h_0)).$$

Therefore we obtain the following

Theorem 12.1. *Let $(\mathring{X}, g)$ be a non-trapping CCM. Let $R(h,\sigma)$ be as in (12.2), $\sigma = 1 + h\sigma'$, $\sigma' \in (-c,c) \times i(-C,C)$. Let $G(h,\sigma)$, be the operator defined in Theorem 3.1. Then*

$$\begin{gathered} R(h,\sigma) = G(h,\sigma) + \mathcal{E}(h,\sigma), \\ \text{with } \beta_0^* K_{\mathcal{E}(h,\sigma)} \in h^\infty e^{-i\frac{\sigma}{h}\tilde{\gamma}} \mathcal{K}_{ph}^{\frac{n}{2},\frac{n}{2}}(X \times_0 X \times [0,h_0)). \end{gathered} \tag{12.4}$$

13. The semiclassical Poisson operator

We use Theorem 12.1 to analyze the semiclassical Poisson operator of non-trapping CCM. We begin by recalling the definition of the Poisson operator and scattering matrix at a fixed energy. Let $(\mathring{X}, g)$ be a CCM, and let x be a boundary defining function. Let $\mu(y,\lambda)$ is defined in (2.10) then, see [6, 24, 27, 36, 43], for any $f \in C^\infty(\partial X)$, and $\lambda \in \mathbb{R}$, $|\lambda| >> 0$, there exists a unique solution to

$$\begin{gathered} (\Delta_g - \frac{\kappa_0 n^2}{4} - \lambda^2) u(\lambda, z) = 0, \text{ such that} \\ u(\lambda,x,y) = x^{\frac{n}{2}+i\mu(\lambda,y)} F_+(x,y,\lambda) + x^{\frac{n}{2}-i\mu(\lambda,y)} F_-(x,y,\lambda), \quad F_+(0,y,\lambda) = f(y), \end{gathered} \tag{13.1}$$

The Poisson operator is the map

$$\begin{gathered} \mathcal{P}(\lambda) : C^\infty(\partial X) \longrightarrow C^\infty(\mathring{X}) \\ f(y) \longmapsto u(\lambda,x,y), \end{gathered} \tag{13.2}$$

where $u(\lambda,x,y)$ is the solution to (13.1). This definition however, depends on the choice of the boundary defining function. So as in [6, 27, 36] one defines the Poisson operator acting on the density bundles $|N^*\partial X|^{\frac{n}{2}+i\mu(y,\lambda)}$ introduced in [27, 54], which keep track of the changes of x, namely

$$\begin{gathered} \widetilde{\mathcal{P}}(\lambda) : C^\infty(\partial X, |N^*\partial X|^{\frac{n}{2}+i\mu(\lambda,y)}) \longrightarrow C^\infty(\mathring{X}), \\ \widetilde{\mathcal{P}}(\lambda) f |dx|^{\frac{n}{2}+i\mu(\lambda,y)} = (\mathcal{P}(\lambda) f)|dx|^{\frac{n}{2}+i\mu(\lambda,y)}, \end{gathered}$$

with $\mathcal{P}(\lambda)$ given by (13.2). One should in fact also use the half-density bundles on ∂X and on X, but we will leave this out for simplicity. The Schwartz kernels of $\widetilde{\mathcal{P}}$ and $\mathcal{P}(\lambda)$ then satisfy

$$K_{\widetilde{\mathcal{P}}(\lambda)} = K_{\mathcal{P}(\lambda)} |dx'|^{-\frac{n}{2}-i\mu(\lambda,y)}. \tag{13.3}$$

In principle the Schwartz kernel of $\mathcal{P}(\lambda)$ is a distribution on $\mathring{X} \times \partial X$, but of course it is more appropriately described in terms of a suitable blow-up. As observed in [36], the blow-down map β_0 defined in (2.1) induces a blow-up on $X \times \partial X$ obtained by defining $X \times_0 \partial X$ to be the projection

$$X \times_0 \partial X = X \times_0 X|_{\{\rho_R = 0\}}$$

and defining

$$\beta_{0,L} : X \times_0 \partial X \longmapsto X \times \partial X, \quad \beta_{0,L} = \beta_0|_{X \times_0 \partial X}. \tag{13.4}$$

It turns out that the Schwartz kernel of $\mathcal{P}(\lambda)$ can be obtained from the kernel of the resolvent, see [6, 27, 36]

$$\beta_{0,L}^* K_{\mathcal{P}(\lambda)} = -i\lambda \beta_0^*((x')^{-\frac{n}{2}+i\mu(\lambda,y)} K_{R(\lambda)})|_{\{\rho_R=0\}}. \tag{13.5}$$

Therefore, if $K_{\widetilde{\mathcal{P}}(\lambda)}$ is given by (13.3), and if $\rho_{0L} = \rho_{\mathrm{ff}}|_{\{\rho_R=0\}}$, where ρ_{ff} is the defining function of the front face, since $\beta_0^* x' = \rho_R \rho_{\mathrm{ff}}$, then $\beta_0^*|dx'||_{\{\rho_R=0\}} = \rho_{0L}|d\rho_R|$, we obtain

$$\beta_{0,L}^* K_{\widetilde{\mathcal{P}}(\lambda)} = -i\lambda \rho_{0L}^{-n} \rho_R^{-\frac{n}{2}+i\mu_R^0} \left(\beta_0^* K_{R(\lambda)}\right)|_{\{\rho_R=0\}} |d\rho_R|^{-\frac{n}{2}-i\mu_R^0} \tag{13.6}$$

where μ_R and μ_L are defined in (2.11) and $\mu_R^0 = \mu_R|_{\{\rho_R=0\}}$.

Next we consider the semiclassical version of $\widetilde{\mathcal{P}}(\lambda)$. If we set $h = (\operatorname{Re}\lambda)^{-1}$, and $\sigma = \frac{\lambda}{\operatorname{Re}\lambda}$, since then it is natural to define the kernel of the semiclassical Poisson operator $\widetilde{\mathcal{P}}_\hbar(h,\sigma)$ to be

$$\rho_{0L}^n \beta_{0,L}^* K_{\widetilde{\mathcal{P}}_\hbar(h,\sigma)} = -i\frac{\sigma}{h} (\rho_R)^{-\frac{n}{2}+i\frac{\sigma}{h}\mu_R^0} \beta_0^* \left(K_{R(h,\sigma)}\right)|_{\{\rho_R=0\}} |d\rho_R|^{-\frac{n}{2}-i\frac{\sigma}{h}\mu_R^0}, \tag{13.7}$$

where $i\frac{\sigma}{h}\mu_R$ is the semiclassical version of μ_R was defined in (3.4). We want to describe the microlocal structure of this operator. It follows from Theorem 12.1 and Theorem 3.1, and the fact that the $\beta_0^* K_{G_0(h,\sigma)}$ and $\beta_0^* K_{G_1(h,\sigma)}$ are supported away from the right face, that

$$\rho_R^{-\frac{n}{2}+i\frac{\sigma}{h}\mu_R}\beta_0^* K_{R(h,\sigma)}|_{\{\rho_R=0\}} =$$
$$\rho_R^{-\frac{n}{2}+i\mu_R}\beta_0^*\left(K_{G_2(h,\sigma)}+K_{G_3(h,\sigma)}+K_{G_4(h,\sigma)}+K_{\mathcal{E}(h,\sigma)}\right)|_{\{\rho_R=0\}} =$$
$$\rho_R^{-\frac{n}{2}}e^{i\frac{\sigma}{h}\mu_R\log\rho_R}e^{-i\frac{\sigma}{h}\tilde{\gamma}}\left(U_2(h,\sigma)+U_3(h,\sigma)+U_4(h,\sigma)+\mathcal{U}(h,\sigma)\right)|_{\{\rho_R=0\}}$$

where $\tilde{\gamma}=\mu_R\log\rho_R+\mu_L\log\rho_L$, and

$$\begin{aligned}
U_2(h,\sigma)&=\rho_R^{\frac{n}{2}}\rho_L^{\frac{n}{2}}W_2(h,\sigma),\quad W_2\in I^{\frac{1}{2}}(X\times_0 X\times[0,h_0)),\\
U_3(h,\sigma)&=(\rho_R\rho_L)^{\frac{n}{2}}W_3,\quad W_3\in h^\infty\mathcal{K}_{ph}^{0,0}(X\times_0 X\times[0,h_0)),\\
U_4(h,\sigma)&=(\rho_R\rho_L)^{\frac{n}{2}}W_4,\quad W_4\in h^\infty\rho_{\mathrm{ff}}^\infty\mathcal{K}_{ph}^{0,0}(X\times_0 X\times[0,h_0)),\ \text{and}\\
\beta_0^*\mathcal{E}&=e^{-i\frac{\sigma}{h}\tilde{\gamma}}\mathcal{U}(h,\sigma),\quad \mathcal{U}(h,\sigma)=(\rho_R\rho_L)^{\frac{n}{2}}\mathcal{U}_1,\quad \mathcal{U}_1\in h^\infty\mathcal{K}_{ph}^{0,0}(X\times_0 X\times[0,h_0)).
\end{aligned}\tag{13.8}$$

So we conclude that

$$\rho_R^{-\frac{n}{2}+i\frac{\sigma}{h}\mu_R}\beta_0^* K_{R(h,\sigma)}|_{\{\rho_R=0\}}=e^{-i\frac{\sigma}{h}\mu_L\log\rho_L}\rho_L^{\frac{n}{2}}(W_2(h,\sigma)+W_3(h,\sigma)+W_4(h,\sigma)+\mathcal{U}_1(h,\sigma))|_{\{\rho_R=0\}}.$$

Therefore, the microlocal structure of $\rho_R^{-\frac{n}{2}+i\frac{\sigma}{h}\mu_R}\beta_0^* K_{R(h,\sigma)}|_{\{\rho_R=0\}}$ is given by the microlocal structure of $e^{-i\frac{\sigma}{h}\mu_L\log\rho_L}\rho_L^{\frac{n}{2}}W_2(h,\sigma)|_{\{\rho_R=0\}}$, since all other terms are $O(h^\infty)$. We claim that

$$W_2(h,\sigma)|_{\{\rho_R=0\}}\in I_{ph}^{\frac{3}{4}}(X\times_0\partial X;\Lambda_{0L}^*,\Omega^{\frac{1}{2}}),$$

where $\Lambda_{0L}^*=\Lambda^*\cap\{\rho_R=0\}$ and $I_{ph}^k(X\times_0\partial X;\Lambda_{0L}^*,\Omega^{\frac{1}{2}})$ is the corresponding space of Lagrangian distributions of order k. The first thing we need to verify is that Λ_{0L}^* is a Lagrangian submanifold of $T^*(X\times_0\partial X)$ which has a polyhomogeneous expansion at $\{\rho_L=0\}$. But this follows from the proof of Theorem 6.1, where this was established. The definition of $I_{ph}^k(X\times_0\partial X;\Lambda_{0L}^*,\Omega^{\frac{1}{2}})$ is completely analogous to Definition 7.5. The only thing one needs to verify is that the restriction of an oscillatory integral as in Definition 7.5 to $\{\rho_R=0\}$ gives an oscillatory integral with a phase Ψ that locally parametrizes Λ_L^* and the symbol is in the corresponding class. But this follows from the definition of the phase functions that parametrize Λ^* as in Theorem 6.5 and Definition 6.9. If $\Phi(z,\theta)$ parametrizes Λ^*, then the conditions (6.56) are valid up to the right and left faces. Since the polyhomogeneous expansion of Φ start with terms in x_j^2, $j=1,2$, the mixed derivatives in (6.56) are well defined and if $\Psi=\Phi|_{\{\rho_R=0\}}$, then Ψ is also a phase function and it parametrizes Λ_{0L}^*. The polyhomogeneous expansions established for the symbol of $W_2(h,\sigma)$ in Lemma 8.1 shows that it can be restricted to $\{\rho_R=0\}$ and are in the corresponding class $\mathcal{S}((0,h)\times\mathcal{O}\times\mathbb{R}^N)$. Therefore locally $W_2(h,\sigma)$ is the sum of oscillatory integrals of the form (7.12), where Ψ_j locally parametrizes Λ_{0L}^*. Finally, notice that according to Definition 7.5, since the dimension drops by one, the order of the Lagrangian distribution goes up by $\frac{1}{4}$, and since W_2 is of order $\frac{1}{2}$, the order of $W_2|_{\{\rho_R=0\}}$ is $\frac{3}{4}$.

So we have obtained the following result about the structure of the semiclassical Poisson operator:

Theorem 13.1. *Let $(\mathring{X},g)$ be a non-trapping CCM, let h_0 be as in (3.5) and let $\Omega_{X\times_0\partial X}^{\frac{1}{2}}$, denote the half-density bundle over $X\times_0\partial X$. Then for $h\in(0,h_0)$, $\rho_{0L}^n\beta_{0,L}^* K_{\widetilde{\mathcal{P}}_h(h,\sigma)}$, defined in (13.7) as a section of the bundle $|N^*R|^{-\frac{n}{2}-i\frac{\sigma}{h}\mu_R^0}\otimes\Omega_{X\times_0\partial X}^{\frac{1}{2}}$, is of the form*

$$\rho_{0L}^n\beta_{0,L}^* K_{\widetilde{\mathcal{P}}_h(h,\sigma)}=-i\frac{\sigma}{h}e^{-i\frac{\sigma}{h}\mu_L\log\rho_L}\rho_L^{\frac{n}{2}}(\mathcal{P}_1(h,\sigma)+\mathcal{E}_3(h,\sigma)),$$
$$\mathcal{P}_1(h,\sigma)\in I_{ph}^{\frac{3}{4}}(X\times_0\partial X;\Lambda_{0L}^*,\Omega^{\frac{1}{2}}),\quad \mathcal{E}_3(h,\sigma)\in h^\infty\mathcal{K}_{ph}^{\frac{n}{2}}(X\times_0\partial X),$$

where $\Lambda_{0L}^*=\Lambda^*\cap\{\rho_R=0\}$ and the polyhomogeneous expansions are in ρ_L.

A result of the same nature as Theorem 13.1 was obtained in [60], where the radiation field was considered. Since the Poisson operator is given in terms of the Fourier transform of the radiation field, Theorem 13.1 essentially gives the behavior of the Fourier transform of the radiation field at high energies.

14. The semiclassical scattering matrix and the scattering relation

We return to the boundary value problem (13.1), and recall that the scattering matrix is the operator defined by

$$\begin{aligned} S(\lambda) : C^\infty(\partial X) &\longrightarrow C^\infty(\partial X) \\ f &\longmapsto F_-(0, y, \lambda). \end{aligned} \tag{14.1}$$

However, as in the case of $\mathcal{P}(\lambda)$, this definition depends on the choice of x and if $x = a(\tilde{x}, y)\tilde{x}$, and if $\widetilde{S}$ is the scattering matrix corresponding to $\tilde{x}$, then

$$S(\lambda)f = a(0, y)^{-\frac{n}{2}+i\mu(\lambda,y)}\widetilde{S}(\lambda)\left(a(0, y)^{\frac{n}{2}+i\mu(\lambda,y)}f\right), \tag{14.2}$$

and so one needs to define $S(\lambda)$ as an operator acting on the density bundles defined above:

$$\begin{aligned} \widetilde{S}(\lambda) : C^\infty(\partial X; |N^*\partial X|^{\frac{n}{2}+i\mu(\lambda,y)}) &\longrightarrow C^\infty(\partial X; |N^*\partial X|^{\frac{n}{2}-i\mu(\lambda,y)}) \\ f|dx|^{\frac{n}{2}+i\mu(\lambda,y)} &\longmapsto (S(\lambda)f)|dx|^{\frac{n}{2}-i\mu(\lambda,y)}, \end{aligned} \tag{14.3}$$

where $S(\lambda)$ is as in (14.1). In that case the Schwartz kernel of $\widetilde{S}(\lambda)$ is written as

$$K_{\widetilde{S}(\lambda)}(y, y') = K_{S(\lambda)}(y, y')|dx'|^{-\frac{n}{2}-i\mu(\lambda,y')}|dx|^{\frac{n}{2}-i\mu(\lambda,y)}, \tag{14.4}$$

where $K_{S(\lambda)}(y, y')$ is the Schwartz kernel of $S(\lambda)$.

As observed in [36], one needs to consider the projection $\partial X \times_0 \partial X = X \times_0 X|_{\{\rho_R=\rho_L=0\}}$ and the blow-down map β_∂ induced by β_0 :

$$\begin{gathered} \beta_\partial : \partial X \times_0 \partial X \longmapsto \partial X \times \partial X \\ \text{where } \beta_\partial = \beta_0|_{\{\rho_R=\rho_L=0\}}. \end{gathered}$$

It has been shown [6, 27, 36] that one can obtain the Schwartz kernel of scattering matrix (14.1) from the kernel of the resolvent via the following formula:

$$\beta_\partial^* K_{S(\lambda)} = -2i\lambda\left(\beta_0^*\left(x^{-\frac{n}{2}+i\mu(y,\lambda)}x'^{-\frac{n}{2}+i\mu(y',\lambda)}K_{R(\lambda)}\right)|_{\{\rho_R=\rho_L=0\}}\right), \tag{14.5}$$

and for fixed $\lambda \in \mathbb{R} \setminus 0$ with $|\lambda| >> 0$, this is a pseudodifferential operator of order zero (in fact of complex order $i\lambda$) and its principal symbol is $2^{i\lambda}\frac{\Gamma(i\lambda)}{\Gamma(-i\lambda)}|\xi|_{h_0}^{-i\lambda}$, where $|\xi|_{h_0}$ is the length of ξ with respect to the (dual metric induced by) h_0. Here we are using the choice of the resolvent according to Theorem 3.1, which is bounded in $L^2(X)$ for $\operatorname{Im}\lambda > 0$.

Recall that if ρ_R, ρ_L are defining functions of the right and left faces, and ρ_{ff} is a defining function of the front face, then $x = \rho_L\rho_{\mathrm{ff}}$, and $x' = \rho_R\rho_{\mathrm{ff}}$ are boundary defining functions, and according to (14.4) and (14.5), if $\rho_0 = \rho_{\mathrm{ff}}|_{\{\rho_R=\rho_L=0\}}$,

$$\begin{gathered} \beta_\partial^* K_{\widetilde{S}(\lambda)} = 2i\lambda\beta_0^*\left(x^{-\frac{n}{2}+i\mu(y,\lambda)}x'^{-\frac{n}{2}+i\mu(y',\lambda)}K_{R(\lambda)}\right)|_{\{\rho_R=\rho_L=0\}}|\rho_0 d\rho_R|^{-\frac{n}{2}-i\mu_R^0}|\rho_0 d\rho_L|^{\frac{n}{2}-i\mu_L^0} = \\ 2i\lambda\rho_0^{-n}\left(\rho_R^{-\frac{n}{2}+i\mu_R(\lambda))}\rho_L^{-\frac{n}{2}+i\mu_L(\lambda)}\beta_0^* K_{R(\lambda)}\right)|_{\{\rho_R=\rho_L=0\}}||d\rho_R|^{-\frac{n}{2}-i\mu_R^0}|d\rho_L|^{\frac{n}{2}-i\mu_L^0}, \end{gathered}$$

where $\mu_\bullet^0 = \mu_\bullet|_{\{\rho_R=\rho_L=0\}}$, $\bullet = R, L$.

Next we consider the semiclassical version of $\widetilde{S}(\lambda)$ and also $\lambda \in \mathbb{C}$. If as above we set $h = (\operatorname{Re}\lambda)^{-1}$, and $\sigma = \frac{\lambda}{\operatorname{Re}\lambda}$, we define the semiclassical scattering matrix $\widetilde{S}_\hbar(h, \sigma)$ as the operator whose Schwartz kernel

satisfies

$$\begin{aligned}\rho_0^n\beta_\partial^* K_{\widetilde{S}_\hbar(h,\sigma)} &= 2i\frac{\sigma}{h}\left(\rho_R^{-\frac{n}{2}+i\frac{\sigma}{h}\mu_R}\rho_L^{-\frac{n}{2}+\frac{\sigma}{h}\mu_L}\beta_0^* K_{R(h,\sigma)}\right)|_{\{\rho_R=\rho_L=0\}}||d\rho_R|^{-\frac{n}{2}-i\frac{\sigma}{h}\mu_R^0}|d\rho_L|^{\frac{n}{2}-i\frac{\sigma}{h}\mu_L^0} = \\ &2i\frac{\sigma}{h}\left((\rho_R\rho_L)^{-\frac{n}{2}}e^{i\frac{\sigma}{h}\tilde{\gamma}}\beta_0^* K_{R(h,\sigma)}\right)|_{\{\rho_R=\rho_L=0\}}||d\rho_R|^{-\frac{n}{2}-i\frac{\sigma}{h}\mu_R^0}|d\rho_L|^{\frac{n}{2}-i\frac{\sigma}{h}\mu_L^0}.\end{aligned} \tag{14.6}$$

As in the case of the Poisson operator, we use this formula and Theorem 12.1 to obtain the semiclassical structure of the scattering matrix. We deduce from Theorem 12.1 and Theorem 3.1, and the fact that the $\beta_0^* K_{G_0(h,\sigma)}$ and $\beta_0^* K_{G_1(h,\sigma)}$ are supported away from the left and right faces, that

$$\begin{gathered}(\rho_R\rho_L)^{-\frac{n}{2}}e^{i\frac{\sigma}{h}\tilde{\gamma}}\beta_0^* K_{R(h,\sigma)}|_{\{\rho_R=\rho_L=0\}} = \\ (\rho_R\rho_L)^{-\frac{n}{2}}e^{i\frac{\sigma}{h}\tilde{\gamma}}\beta_0^*\left(K_{G_2(h,\sigma)}+K_{G_3(h,\sigma)}+K_{G_4(h,\sigma)}+K_{\mathcal{E}(h,\sigma)}\right)|_{\{\rho_R=\rho_L=0\}} = \\ (\rho_R\rho_L)^{-\frac{n}{2}}U_2(h,\sigma)|_{\{\rho_R=\rho_L=0\}}+h^\infty A(h,\sigma) = W_2(h,\sigma)|_{\{\rho_R=\rho_L=0\}}+h^\infty A(h,\sigma),\end{gathered}$$

where W_2 is defined in (13.8). As in the case of the Poisson operator, the microlocal structure of $\rho_0^n\beta_\partial^* K_{\widetilde{S}_\hbar(h,\sigma)}$ is given by $W_2(h,\sigma)|_{\{\rho_R=\rho_L=0\}}$. We claim that

$$W_2(h,\sigma)|_{\{\rho_R=\rho_L=0\}} \in I^1(\partial X\times_0\partial X,\Lambda_\partial^*,\Omega^{\frac{1}{2}}),$$

where $\Lambda_\partial^* = \Lambda^*|_{\{\rho_R=\rho_L=0\}}$, and we define Λ_∂^* to be the scattering relation of $(\mathring{X},g)$. Notice that it follows from Theorem 6.1 that the Lagrangian submanifold Λ_∂^* as well as the symbols of the elements $I^1(\partial X\times_0\partial X,\Lambda_\partial^*,\Omega^{\frac{1}{2}})$ extend smoothly across the boundary of $\partial T^*(\partial X\times_0\partial X)$. As in the argument already used in the case of the Poisson operator, and the fact that if $\Phi(z,\theta)$ parametrizes Λ^*, locally, then $\Phi|_{\{\rho_R=\rho_L=0\}}$ parametrizes Λ_∂. Moreover, the restriction of the symbols constructed in in Lemma 8.1 to $\{\rho_R=\rho_L=0\}$ are C^∞ functions. Since the dimension drops by two, the order of the Lagrangian distribution goes up by $\frac{1}{2}$. The factor of h^{-1} on the right hand side of (14.6) gives that the order of $S(h,\sigma)=2i\frac{\sigma}{h}W_2(h,\sigma)|_{\{\rho_R=\rho_L=0\}}$ equals two. So we have proved the following

Theorem 14.1. *Let $(\mathring{X},g)$ by a non-trapping CCM. Then $\rho_0^n\beta_\partial^* K_{\widetilde{S}_\hbar(h,\sigma)}$ defined in* (14.6) *is of the form $S(h,\sigma)|N^*L|^{\frac{n}{2}-i\frac{\sigma}{h}\mu_L}|N^*R|^{-\frac{n}{2}-i\frac{\sigma}{h}\mu_R}\otimes\Omega^{\frac{1}{2}}_{\partial X\times_0\partial X}$ where $S(h,\sigma)\in I^2(\partial X\times_0\partial X,\Lambda_\partial^*,\Omega^{\frac{1}{2}})$.*

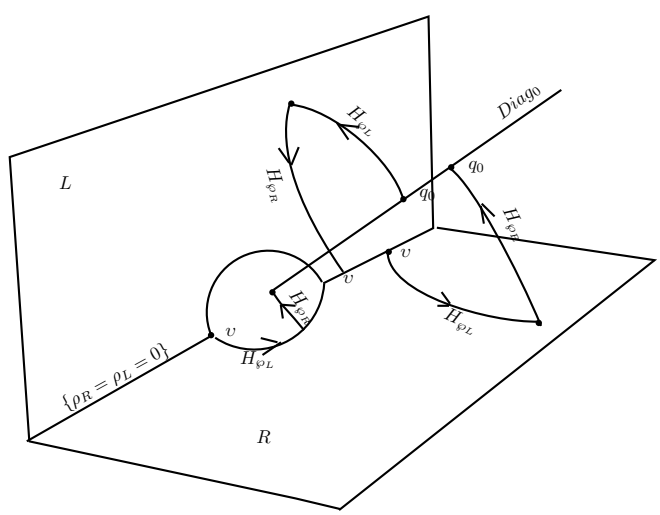

FIGURE 6. The projection of the scattering relation onto $X\times_0 X$. A point $\upsilon=(\upsilon_1,\upsilon_2)\in\partial X\times_0\partial X$ and the projections of the integral curves of $H_{\wp_R}$ followed by an integral curve of $H_{\wp_L}$ joining υ to a point $q_0\in\mathrm{Diag}_0$. Or vice-versa, the integral curves of $H_{\wp_R}$ and $H_{\wp_L}$ joining $q_0\in\mathrm{Diag}_0$ to $\upsilon\in\partial X\times_0\partial X$.

The scattering relation in fact plays the role of the standard scattering relation in Euclidean metric or obstacle scattering. Let $\upsilon \in \Lambda^*_\partial$, then it follows from Theorem 6.1 and equation (6.17) that there exists a point $q_0 \in \widetilde{\Lambda}_0$ and $t_1, t_2 > 0$ such that

$$\upsilon = \exp(t_1 H_{\wp_R}) \circ \exp(t_2 H_{\wp_L})(q_0) = \exp(t_2 H_{\wp_L}) \circ \exp(t_1 H_{\wp_R})(q_0),$$

where the last equality is due to the fact that the vector fields commute on Λ^*. Therefore, there exists an integral curve of $H_{\wp_R}$ starting at $q_0 \in \widetilde{\Lambda}_0$ and going to a point q_L on the left face, and then an integral curve of $H_{\wp_R}$ going from q_L to υ. Notice that since $H_{\wp_\bullet}$ is tangent to the front face, the only integral curves that start on the diagonal and hit $\{\rho_R = \rho_L = 0\}$ are those that start at the intersection of $\widetilde{\Lambda}_0$ and the front face, see Fig.6. But if the projection of υ to the base $X \times_0 \partial X$ is away from $\partial(\partial X \times_0 \partial X)$, one may identify $\upsilon = (\upsilon_1, \upsilon_2) \in T^*\partial X \times T^*\partial X \sim T^*(\partial X \times \partial X)$ and so one may say that there exists $\upsilon = (\upsilon_1, \upsilon_2)$ which is joined to a point on $\widetilde{\Lambda}_0$ by an integral curve of $H_{\wp_R}$ followed by an integral curve of $H_{\wp_L}$. But away from the front face, one may identify $\widetilde{\Lambda}_0$ and Λ_0 and an integral curve of $H_{\wp_R}$ as $(q_0, p_R(t))$ with $q_0 = (z, \zeta) \in T^*X$, and $p'_R(t) = H_{\wp_R}(\wp_R(t))$ and $p'_L(t) = H_{\wp_L}(\wp_R(t))$ and an integral curve of $H_{\wp_L}$ as $(p_L(t), q_0^*)$ with $q_0^* = (z, -\zeta) \in T^*X$, and $p'_L(t) = H_{\wp_L}(\wp_L(t))$. Since the vector fields $H_{\wp_\bullet}$, $\bullet = R, L$, are tangent to the front face, the bicharacteristic relation is well defined for points on $\partial T^*(\partial X \times \partial X)$. In this case, the discussion is completely analogous to the one above, but restricted to the front face.

Away from the front face and near $L \cap R$, we may use x and x' as defining functions of the right and left faces. If $\mu(\lambda)$ is the function defined in (2.10), if $\lambda = \sigma/h$ and $\mu(h, \sigma) = \mu(\sigma/h)$, and $\wp$ is the semiclassical principal symbol of $p(z, \zeta + d\mu \log x)$ then one may use the discussion above to say that there exists an integral curve of $H_\wp$ starting at a point $q_0 \in T^*(X)$ going to a point $(y, \eta) \in T^*\partial X$ and there is another bicharacteristic starting at the q_0^* going to a point $(y', \eta') \in T^*\partial X$, see Fig.7. This gives the twisted bicharacteristic relation $(y, \eta) \mapsto (y', \eta')$ as discussed in the example given in the introduction.

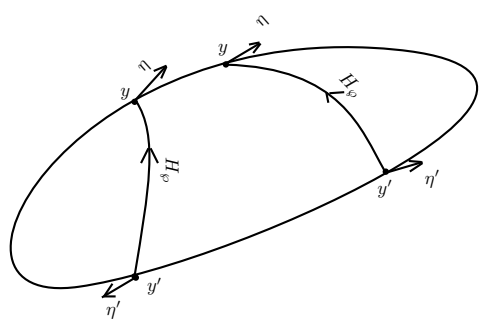

FIGURE 7. One can interpret the scattering relation away from the diagonal of $\partial X \times \partial X$ as the map $T^*\partial X \ni (y, \eta') \longmapsto (y, \eta) \in T^*\partial X$ obtained by taking the integral curve of $H_\wp$ beginning at $(y', \eta') \in T^*\partial X$ and ending at the point $(y, \eta) \in T^*\partial X$ where this curve crosses ∂X again.

15. Resolvent estimates for non-trapping CCM

The proof of Theorem 1.1 follows from the asymptotics of the parametrix $G(h, \sigma)$ and the remainder $\mathcal{E}(h, \sigma)$ established in Theorem 3.1 and Theorem 12.1. The main point is the following result from (the proof of) Theorem 3.25 of [45], see also Lemma 6.2 of [52]:

Lemma 15.1. *Suppose that the Schwartz kernel of an operator $B : C_0^\infty(X) \longrightarrow C^{-\infty}(X)$, trivialized by $|dg(z')|$, satisfies*

$$|\beta_0^* K_B| \leq C \rho_L^\alpha \rho_R^\beta, \tag{15.1}$$

then we have four situations:

$$\text{If } \alpha, \beta > n/2, \text{ then } \|B\|_{\mathcal{L}(L^2)} \leq C'C.$$

$$\text{If } \alpha = n/2, \quad \beta > n/2, \text{ then } \||\log x|^{-N} B\|_{\mathcal{L}(L^2)} \leq C'C, \text{ for } N > \frac{1}{2}.$$

$$\text{If } \alpha > n/2, \quad \beta = n/2, \text{ then } \||B| \log x|^{-N}\|_{\mathcal{L}(L^2)} \leq C'C, \text{ for } N > \frac{1}{2}.$$

$$\text{If } \alpha = \beta = n/2, \text{ then } \||\log x|^{-N} B| \log x|^{-N}\|_{\mathcal{L}(L^2)} \leq C'C, \quad N > \frac{1}{2}.$$

According to Theorem 12.1, the kernel of $R(h,\sigma)$ is given by (12.4), and so we need to show that the lifts of the kernels of the operators $G(h,\sigma)$ and $\mathcal{E}(h,\sigma)$ satisfy estimates such as (15.1). We know from Theorem 3.1 that $G(h,\sigma) = \widetilde{G}_1(h,\sigma) + \widetilde{G}_2(h,\sigma)$, where $\widetilde{G}_1(h,\sigma) = G_0(h,\sigma) + G_1(h,\sigma)$ and $\widetilde{G}_2(h,\sigma) = G_2(h,\sigma) + G_3(h,\sigma) + G_4(h,\sigma)$. In view of the construction, $\beta_\hbar^* K_{\widetilde{G}_1}$ is bounded and supported near the semiclassical front face, and hence $\beta_0^* K_{\widetilde{G}_1}$ is bounded and supported near $\mathrm{Diag}_0 \times [0, h_0)$, and so it satisfies (15.1) for any α and β. Since Λ^* is compact, one only needs finitely many oscillatory integrals, and the second part of the kernel which is given by the semiclassical parametrix is of the form

$$\beta_0^* K_{\widetilde{G}_2(h,\sigma)} = \sum_{j=1}^{J} h_j^{-1-\frac{n}{2}-\frac{N_j}{2}} \rho_R^{\frac{n}{2}} \rho_L^{\frac{n}{2}} e^{-i\frac{\sigma}{h}\tilde{\gamma}} W_j, \quad W_j \in L^\infty,$$

One can pick the largest N_j. In the case of geodesically convex CCM, $N_j = 0$. Therefore,

$$\beta_0^* K_{\rho^a \widetilde{G}_2(h,\sigma)\rho^b} = h^{-N} \rho_{\mathrm{ff}}^{a+b} \rho_R^{a+\frac{n}{2}} \rho_L^{b+\frac{n}{2}} e^{-i\frac{\sigma}{h}\tilde{\gamma}} W,$$

but in view of (3.6) and (3.7)

$$|e^{-i\frac{\sigma}{h}\tilde{\gamma}}| \leq C \rho_R^{\frac{\mathrm{Im}\,\sigma}{h\kappa_R}} \rho_L^{\frac{\mathrm{Im}\,\sigma}{h\kappa_L}}.$$

Therefore, if for any boundary defining function ρ,

$$|\beta_0^* K_{\rho^a \widetilde{G}_2(h,\sigma)\rho^b}| \leq C h^{-N} \rho_{\mathrm{ff}}^{a+b} \rho_R^{a+\frac{n}{2}+\frac{\mathrm{Im}\,\sigma}{h\kappa_R}} \rho_L^{b+\frac{n}{2}+\frac{\mathrm{Im}\,\sigma}{h\kappa_L}}$$

In particular, if $a, b > \frac{\mathrm{Im}\,\sigma}{h\kappa_0}$ and $a + b \geq 0$, Lemma 15.1 guarantees that there exists $C > 0$ such that

$$\|\rho^a G(h,\sigma)\rho^b f\|_{L^2(X)} \leq C h^{-N} \|f\|_{L^2(X)},$$

On the other hand, the same argument shows that $\rho^a \mathcal{E}(h,\sigma)\rho^b$, where $\mathcal{E}(h,\sigma)$ is the error term given by Theorem 12.1 satisfies, for any $L > 0$,

$$|\beta_0^* K_{\rho^a \mathcal{E}_2(h,\sigma)\rho^b}| \leq C_L h^L \rho_{\mathrm{ff}}^{a+b} \rho_R^{a+\frac{n}{2}+\frac{\mathrm{Im}\,\sigma}{h\kappa_R}} \rho_L^{b+\frac{n}{2}+\frac{\mathrm{Im}\,\sigma}{h\kappa_L}},$$

and again, Lemma 15.1 gives that and for any $L > 0$ there exists $C_L > 0$ such that

$$\|\rho^a \mathcal{E}(h,\sigma)\rho^b f\|_{L^2(X)} \leq C_L h^L \|f\|_{L^2(X)}.$$

Since

$$\rho^a P(h,\sigma,D)^{-1} \rho^b = h^2 \rho^a G(h,\sigma)\rho^b + h^2 \rho^a \mathcal{E}(h,\sigma)\rho^b,$$

we conclude that

Theorem 15.2. *If (X, g) is a non-trapping convex CCM, there exists $N > 0$ such that and if $a, b > \frac{\mathrm{Im}\,\sigma}{h\kappa_0}$ and $a + b \geq 0$, there exists $C > 0$ such that*

$$\|\rho^a P(h,\sigma)^{-1} \rho^b f\|_{L^2(X)} \leq C h^{-N} \|f\|_{L^2(X)}. \tag{15.2}$$

Moreover we also have estimates for the cases when $a = \frac{\mathrm{Im}\,\sigma}{h}$ and/or $a = \frac{\mathrm{Im}\,\sigma}{h}$.

The holomorphic continuation and L^2 estimates of $\rho^a R(\lambda)\rho^b$ follows from (15.2) and the fact that $(\mathrm{Re}\,\lambda)^2 R(\lambda) = P(h,\sigma,D)$, where $h = (\mathrm{Re}\,\lambda)^{-1}$ and $\sigma^2 = 1 + i\frac{\mathrm{Im}\,\lambda}{\mathrm{Re}\,\lambda}$. This proves Theorem 1.1 .

16. Resolvent estimates on CCM with hyperbolic trapping

We will use Theorem 1.1 and the results of Datchev and Vasy to extend the resolvent estimates for metrics with hyperbolic trapping and prove Theorem 1.2.

Proof. The main idea of the proof consists splitting the manifold X and the operator Δ_g in a way that one can apply the results of Datchev and Vasy [12]. This is done as in [53]. As in the Introduction, we assume that $x \in C^\infty(X)$ is a boundary defining function and as in [12], let

$$X = X_0 \cup X_1, \quad X_0 = \{x < 2\varepsilon\}, \quad X_1 = \{x > \frac{\varepsilon}{2}\}.$$

Let $(\mathring{X}, g_0)$ be a non-trapping CCM and let g be a C^∞ metric on $\mathring{X}$ such that $g = g_0$ in X_0 and suppose that in X_1 the trapped set of g, that is, the set of maximally extended geodesics of g which are precompact, is normally hyperbolic. We define $\tilde{X}_1$ to be another Riemannian manifold extending $X_1' = \{x > \varepsilon\}$, which is Euclidean outside some compact set. Let P_1 be a self-adjoint second order differential operator such that the operator $P_1|_{X_1} = \Delta_g|_{X_1}$ and suppose the principal symbol of P_1 is equal to the Laplacian of the metric on $\tilde{X}_1$. Let

$$P_2 = h^2 P_1 - i\Upsilon, \quad h \in (0,1),$$

where $\Upsilon \in C^\infty(\tilde{X}_1; [0,1])$ is such that $\Upsilon = 0$ on X_1 and $\Upsilon = 1$ on $\tilde{X}_1 \setminus X_1'$. Thus, $P_1 - 1$ is semiclassically elliptic on a neighborhood of $X_1 \setminus X_1'$. In particular, this implies that X_1 is bicharacteristically convex in X, i.e. no bicharacteristic of $P_1 - 1$ leaves X_1 and returns later. By Theorem 1 of [65] there exist positive constants C, c, N and δ independent of h such that

$$||(P_2 - \sigma)^{-1} f||_{L^2(\tilde{X}_1)} \leq C h^{-N} ||f||_{L^2(\tilde{X}_1)}, \quad \sigma \in (1-c, 1+c) \times (-\delta h, \delta h).$$

On the other hand, since $\Delta_{g_0}|_{X_0} = \Delta_g|_{X_0}$, and the semiclassical resolvent for Δ_{g_0} satisfies (15.2), Theorem 2.1 of [12] implies that if $a, b > \frac{\operatorname{Im}\sigma}{h\kappa_0}$ and $a + b \geq 0$, there exists $C > 0$ and $N > 0$ such that

$$\|\rho^a (h^2(\Delta_{g_0} - \frac{\kappa_0 n^2}{4}) - \sigma^2)^{-1} \rho^b f\|_{L^2(X)} \leq C h^{-N} \|f\|_{L^2(X)}. \tag{16.1}$$

The high energy resolvent estimate (1.7) follows easily from this one.

□

17. Acknowledgements

The first author visited the Mathematics Department of the Universidade Federal de Santa Catarina at Florianópolis (UFSC) during the northern summer 2015 when part of this work was done. His visit to UFSC was made possible by a grant of Professor Visitante Especial from CAPES, Brazil. The work was also supported by a grant from the Simons Foundation (#349507, Antônio Sá Barreto). The authors are very grateful to two anonymous referees for their very useful comments.

References

[1] S. Agmon. *Spectral theory of Schrödinger operators on Euclidean and on non-Euclidean spaces.* Comm. Pure Appl. Math., 39(S, suppl.):S3–S16, 1986. Frontiers of the mathematical sciences: 1985 (New York, 1985).

[2] R. Abraham, J.E. Marsden. *Foundations of Mechanics.* Benjamin-Cummings, London, (1978).

[3] I. Alexandrova. *Semi-classical wavefront set and Fourier integral operators.* Canad. J. Math. 60, no. 2, 241–263. (2008).

[4] M.T. Anderson. *Topics in conformally compact Einstein metrics. Perspectives in Riemannian geometry.* 1–26, CRM Proc. Lecture Notes, 40, Amer. Math. Soc., Providence, RI, (2006).

[5] S. Bates and A. Weinstein. *Lectures on the geometry of quantization.* Berkeley Mathematics Lecture Notes, vol. 8, American Mathematical Society, Providence, RI, 1997.

[6] D. Borthwick. *Scattering Theory for Conformally Compact Metrics with Variable Curvature at Infinity.* Journal of Functional Analysis 184, 313-376 (2001).

[7] D. Borthwick, P. Perry. *Scattering poles for asymptotically hyperbolic manifolds.* Trans. Amer. Math. Soc. 354, no. 3, 1215–1231, (2002).

[8] F. Cardoso, G. Vodev. *Uniform estimates of the resolvent of the Laplace-Beltrami operator on infinite volume Riemannian manifolds. II.* Ann. Henri Poincaré 3, no. 4, 673691, (2002).
[9] X. Chen, A. Hassell. *Resolvent and spectral measure on non-trapping asymptotically hyperbolic manifolds I: Resolvent construction at high energy.* arXiv:1410.6881
[10] X. Chen, A. Hassell. *Resolvent and spectral measure on non-trapping asymptotically hyperbolic manifolds II: spectral measure, restriction theorem, spectral multiplier.* arXiv:1412.4427
[11] X. Chen. *Resolvent and Spectral Measure on Non-Trapping Asymptotically Hyperbolic Manifolds III: Global-in-Time Strichartz Estimates without Loss.* arXiv:1504.02375
[12] K. Datchev, A. Vasy. *Gluing semiclassical resolvent estimates via propagation of singularities.* Int. Math. Res. Not. IMRN, no. 23, 5409-5443, (2012).
[13] K. Datchev. *Quantitative limiting absorption principle in the semiclassical limit.* Geom. Funct. Anal. 24, no. 3, 740747, (2014).
[14] J. J. Duistermaat. *Fourier integral operators.* Vol. 130. Springer, (1996).
[15] J. J. Duistermaat. *Oscillatory integrals, Lagrange immersions and unfolding of singularities.* Comm. Pure Appl. Math. 27, 207-281, (1974).
[16] J. Duistermaat, L. Hörmander. *Fourier integral operators. II.* Acta Math. 128, no. 3–4, 183–269, (1972).
[17] L Faddeev. *Expansion in eigenfunctions of the Laplace operator in the fundamental domain of a discrete group in the Lobacevski plane.* Trudy Moscov. Mat. Obsc., vol. 17, 323–350, (1967).
[18] L. Faddeev, B. Pavlov. *Scattering theory and automorphic functions.* Seminar of Steklov Math. Institute of Leningrad, vol. 27, 161–193, (1972).
[19] S. Gallot, D. Hulin, J. Lafontaine. *Riemannian geometry.* Universitext, Springer-Verlag, Berlin, (1987).
[20] C. Guillarmou. *Meromorphic properties of the resolvent on asymptotically hyperbolic manifolds.* Duke Math. J. 129, no. 1, 1–37, (2005).
[21] C. Guillarmou. *Absence of resonance near the critical line on asymptotically hyperbolic spaces.* Asymptot. Anal. 42, no. 1-2, 105–121, (2005).
[22] V. Guillemin, V. *Sojourn times and asymptotic properties of the scattering matrix.* Proceedings of the Oji Seminar on Algebraic Analysis and the RIMS Symposium on Algebraic Analysis (Kyoto Univ., Kyoto, 1976). Publ. Res. Inst. Math. Sci. 12, supplement, 69–88, (1976/77).
[23] V. Guillemin, S. Sternberg. *Semi-classical analysis.* International Press, Boston, MA, (2013).
[24] L. Guillopé, M. Zworski. *Scattering asymptotics for Riemann surfaces.* Ann. Math. 145, 597–660, (1997)
[25] L. Guillopé, M. Zworski. *Polynomial bounds on the number of resonances for some complete spaces of constant negative curvature near infinity.* Asymptot. Anal. 11, 1–22, (1995)
[26] C.R. Graham. *Volume and area renormalization for conformally compact Einstein metrics.* Rend. Circ. Mat. Palermo (2) Suppl. No. 63 no. 1, 1–87.31–42, (2000).
[27] C.R. Graham, M. Zworski. *Scattering matrix in conformal geometry.* Invent. Math. 152, no. 1, 89–118, (2003).
[28] D. Grieser. *Basics of the b-calculus. Approaches to singular analysis.* (Berlin, 1999), 30–84, Oper. Theory Adv. Appl., 125, Birkhuser, Basel, (2001).
[29] A. Grigis and J. Sjöstrand. *Microlocal analysis for differential operators. An introduction.* London Mathematical Society Lecture Note Series, 196. Cambridge University Press, Cambridge, (1994).
[30] A. Hassell and J. Wunsch. *The semiclassical resolvent and the propagator for non-trapping scattering metrics.* Adv. Math. 217 (2008), no. 2, 586–682.
[31] P. Hislop, The geometry and spectra of hyperbolic manifolds, Proc. Indian Acad. Sci. 104, 715-776, (1994)
[32] R. Hora, A. Sá Barreto. *Inverse scattering with partial data on asymptotically hyperbolic manifolds.* Analysis & PDE, Vol. 8, No. 3, 513–559, (2015).
[33] L. Hörmander. *Fourier integral operators I.* Acta Math. 127, no. 1-2, 79183, (1971).
[34] L. Hörmander. *The Analysis of Linear Partial Differential Operators. vol. I-IV.* Springer Verlag, (1994).
[35] H. Isozaki, Y. Kurylev. *Introduction to spectral theory and inverse problem on asymptotically hyperbolic manifolds.* arXiv:1102.5382
[36] M. Joshi, A. Sá Barreto. *Inverse scattering on asymptotically hyperbolic manifolds.* Acta. Math. 184, 41–86, (2000).
[37] M. Joshi and A. Sá Barreto. *The wave group on asymptotically hyperbolic manifolds.* J. Funct. Anal. 184: 291–312, (2001).
[38] L. Ji, Lizhen and M. Zworski. *Scattering matrices and scattering geodesics of locally symmetric spaces.* Ann. Sci. École Norm. Sup. (4) 34 no. 3, 441–469, (2001).
[39] L. Ji, Lizhen and M. Zworski. *Correction and supplements to: "Scattering matrices and scattering geodesics of locally symmetric spaces" [Ann. Sci. École Norm. Sup. (4) 34 (2001), no. 3, 441–469].* Ann. Sci. École Norm. Sup. (4) 35 (2002), no. 6, 897–901.
[40] P. Lax and R. Phillips. *Scattering Theory for Automorphic Functions.* Ann. of Math. Stud., 87. Princeton Univ. Press, Princeton, N J, (1976).
[41] L. Marazzi. *Asymptotically hyperbolic manifolds with polyhomogeneous metrics.* Differential Integral Equations 24 , no. 9–10, 973–1000, (2011).

[42] A. Martinez. *An Introduction to semiclassical and microlocal analysis.* Springer-Verlag, New York, (2002).
[43] R. Mazzeo, R. Melrose. *Meromorphic extension of the resolvent on complete spaces with asymptotically constant negative curvature.* J. Funct. Anal. 75, no. 2, 260–310, (1987).
[44] R. Mazzeo. *The Hodge cohomology of a conformally compact metric.* J. Diff. Geom. 28, 309–339, (1988).
[45] R. Mazzeo. *Elliptic theory of differential edge operators. I.* Comm. Partial Differential Equations 16, no. 10, 1615–1664, (1991).
[46] R. Mazzeo. *Unique continuation at infinity and embedded eigenvalues for asymptotically hyperbolic manifolds.* Amer. J. Math. 113, 25-45, (1991).
[47] R. Melrose and G. Uhlmann. *Lagrangian intersection and the Cauchy problem.* Comm. Pure Appl. Math. 32 no. 4, 483-519, (1979).
[48] R. Melrose. *Analysis on manifolds with corners.* Lecture notes, MIT. www.math.mit.edu/∼rbm
[49] R. Melrose. *Calculus of conormal distributions on manifolds with corners.* Inter. Math. Res. Not., 51-61, (1992).
[50] R. Melrose. *The Atiyah-Patodi-Singer index theorem.* AK Peters, Wellesley, (1993).
[51] R. Melrose. *Geometric scattering theory.* Stanford Lectures, Cambridge University Press, (1995).
[52] R. Melrose, A. Sá Barreto, A. Vasy. *Analytic Continuation and Semiclassical Resolvent Estimates on Asymptotically Hyperbolic Spaces.* Comm. in PDE. 39, no. 3, 452–511, (2014).
[53] R. Melrose, A. Sá Barreto, A. Vasy. *Asymptotics of solutions of the wave equation on de Sitter-Schwarzschild space.* Comm. Partial Differential Equations 39, no. 3, 512–529, (2014).
[54] R. Melrose and M. Zworski. *Scattering metrics and geodesic flow at infinity.* Invent. Math. 124, 389-436, (1996).
[55] S. Nonnenmacher and M. Zworski. *Quantum decay rates in chaotic scattering.* Acta Math. 203, no. 2, 149233, (2009).
[56] S. Nonnenmacher and M. Zworski. *Semiclassical resolvent estimates in chaotic scattering.* Appl. Math. Res. Express. AMRX, no. 1, 7486, (2009)
[57] P. Perry. *The Laplace operator on a hyperbolic manifold. I. Spectral and scattering theory.* J. Funct. Anal., 75:161–187, (1987).
[58] P. Perry. *The Laplace operator on a hyperbolic manifold. II. Eisenstein series and the scattering matrix.* J. Reine. Angew. Math., 398:67?91, (1989).
[59] A. Sá Barreto. *Radiation fields, scattering and inverse scattering on asymptotically hyperbolic manifolds.* Duke Math. Journal Vol 129, No. 3, 407-480, (2005).
[60] A. Sá Barreto, J. Wunsch. *The radiation field is a Fourier integral operator.* Ann. Inst. Fourier (Grenoble) 55, no. 1, 213–227, (2005).
[61] A. Vasy. *Microlocal analysis of asymptotically hyperbolic spaces and high-energy resolvent estimates.* Inverse problems and applications: inside out. II, 487–528, Math. Sci. Res. Inst. Publ., 60, Cambridge Univ. Press, Cambridge, (2013).
[62] A. Vasy. *Resolvents, Poisson operators and scattering matrices on asymptotically hyperbolic and de Sitter spaces.* J. Spectr. Theory 4, no. 4, 643–673, (2014).
[63] A. Vasy. *Microlocal analysis of asymptotically hyperbolic and Kerr-de Sitter spaces* (with an appendix by Semyon Dyatlov). Invent. Math. 194, no. 2, 381–513, (2013).
[64] Y. Wang. *Resolvent and radiation fields on non-trapping asymptotically hyperbolic manifolds.* arXiv:1410.6936
[65] J. Wunsch, M. Zworski. *Resolvent estimates for normally hyperbolic trapped sets.* Ann. Henri Poincaré 12:1349–1385, (2011).
[66] M. Zworski. *Semiclassical analysis.* Graduate Studies in Mathematics, 138. American Mathematical Society, Providence, RI, (2012).

Antônio Sá Barreto
Department of Mathematics, Purdue University
150 North University Street, West Lafayette Indiana, 47907, USA
E-mail address: sabarre@purdue.edu

Yiran Wang
University of Washington, Department of Mathematics
Box 354350 Seattle, WA 98195-4350
and
Institute for Advanced Study, The Hong Kong University of Science and Technology
Lo Ka Chung Building, Lee Shau Kee Campus, Clear Water Bay, Kowloon, Hong Kong
E-mail address: wangy257@math.washington.edu